	℃					
	℃					
	℃					
						Ω

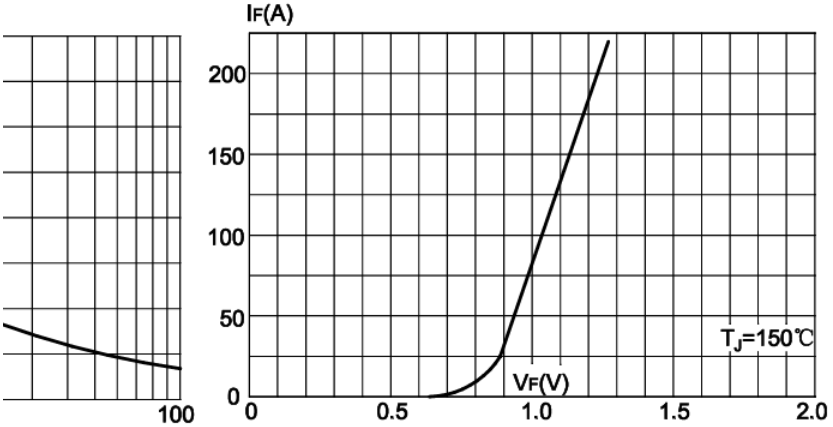

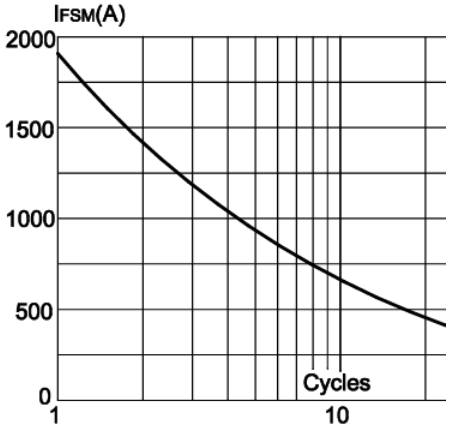

al impedance
diode)

FIG.3: Forward current vs. case temperature
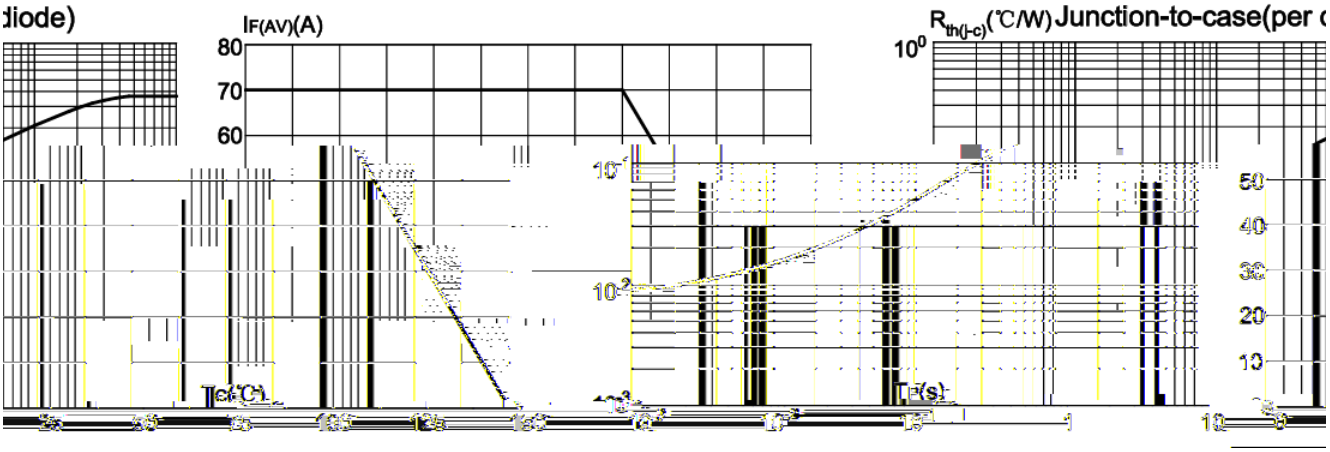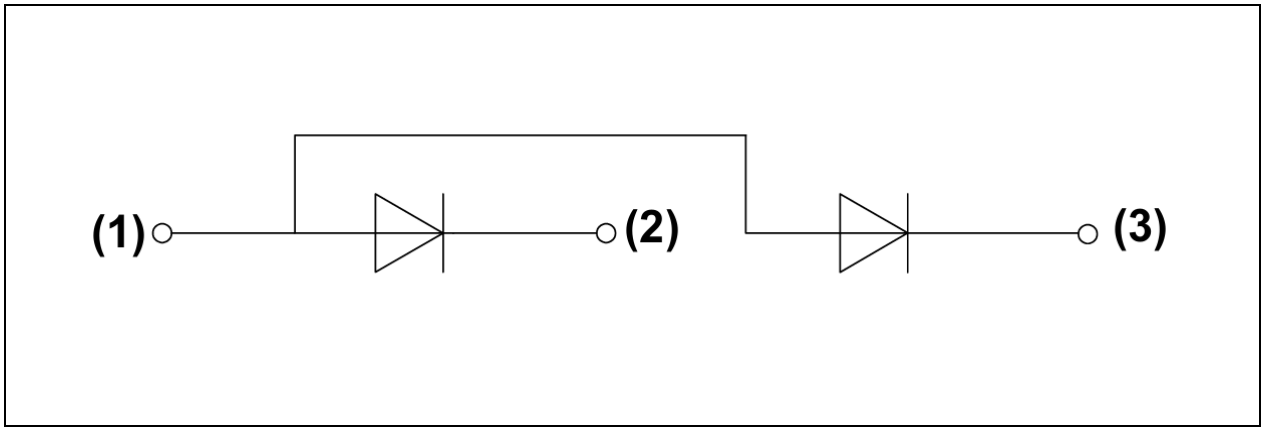
FIG.4: Maximum transient therma