## Features

- A package of series of two diodes
- With high thermal conductivity DBC as the Insulation
- Welding by vacuum welding technology, which provide high reliability

## Product Summary

## Applications

- AC converter
- Inverter
- DC motor

## Absolute Maximum Ratings (@ $T_C$ = 25°C unless otherwise specified)

| Parameter | Conditions | Symbol | Values | Unit |
|---|---|---|---|---|
| Repetitive peak reverse voltage | Tvj = 25°C | $V_{RRM}$ | 1800 | V |
| Non-repetitive peak reverse voltage | Tvj = 25°C | $V_{RSM}$ | 1900 | V |
| Average forward current | $T_C$ = 100°C | $I_{F(AV)}$ | 300 | A |
| Forward surge current | 1/2 cycle, Sine wave, 50Hz Tvj = 25 | $I_{FSM}$ | 11000 | A |
| $I^2t$ value for fusing | | $I^2t$ | 605000 | $A^2s$ |
| RMS isolation voltage | A.C 50Hz(1s/1min) | $V_{ISO}$ | 3600/3000 | V |
| Junction temperature range | | $T_J$ | -40 ~ +150 | |


Jiangsu JieJie Microelectronics Co., Ltd.
All product information are copyrighted and subject to legal disclaimers

## Electrical Characteristics (@ $T_C$ = 25°C unless otherwise specified)

| Parameter | Conditions | Symbol | Values | | | Unit |
|---|---|---|---|---|---|---|
| | | | Min. | Typ. | Max. | |
| Peak forward voltage | $I_F$=900A, $t_P$=380μs | $V_F$ | | | 1.60 | V |
| Reverse leakage current | $V_R = V_{RRM}, T_{vj}$ = 25 | $I_{RRM}$ | | | 100 | μA |
| | $V_R = V_{RRM}, T_{vj}$ = 150 | | | | 90 | mA |
| Threshold voltage | $T_{vj}$ = 150 , for power loss calculation only | $V_{TO}$ | | | 0.8 | V |
| Dynamic resistance | | $r_T$ | | | 0.75 | m |

## Thermal Characteristics (@ $T_C$ = 25°C unless otherwise specified)

| Parameter | Conditions | Symbol | Values | | | Unit |
|---|---|---|---|---|---|---|
| | | | Min. | Typ. | Max. | |
| Thermal resistance, junction to case | per diode | $R_{th(j-c)}$ | | 0.12 | | /W |
| Thermal resistance, case to heatsink | per diode | $R_{th(c-s)}$ | | 0.05 | | /W |
| Mounting torque | Module and heatsink fixed torque M5 | M | 4.25 | | 5.75 | N·m |
| | Electrode connection torque M8 | | 7.65 | | 10.34 | N·m |

## Ordering Information

| Device | Marking | Package | Weight | Inner Box | Pre Carton |
|---|---|---|---|---|---|
| JMD300KD18T3W | JMD300KD18T3W | T3 | 355 5g/PCS | 3 PCS | 27 PCS |


Jiangsu JieJie Microelectronics Co., Ltd.
All product information are copyrighted and subject to legal disclaimers

## Typical Electrical & Thermal Characteristics

**FIG.1:** Forward characteristics(per diode)

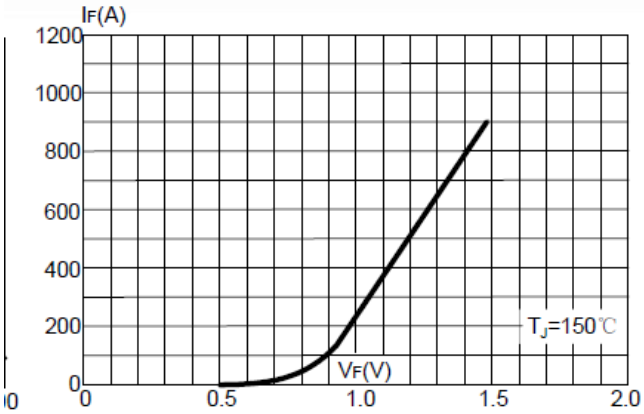


**FIG.2:** Peak on-state surge current

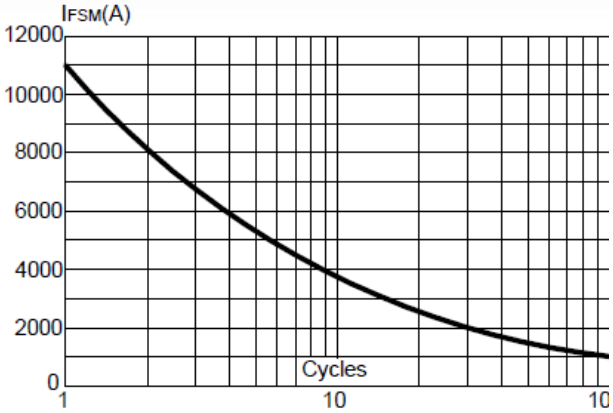


**FIG.3:** Forward current vs. case temperature

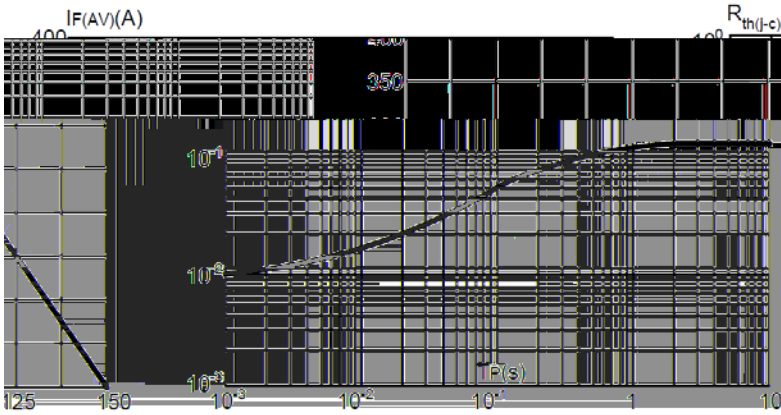


**FIG.4:** Maximum transient thermal impedance

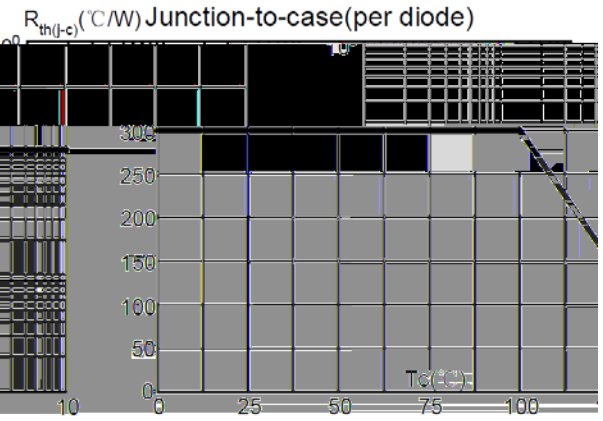


## Circuit Diagram

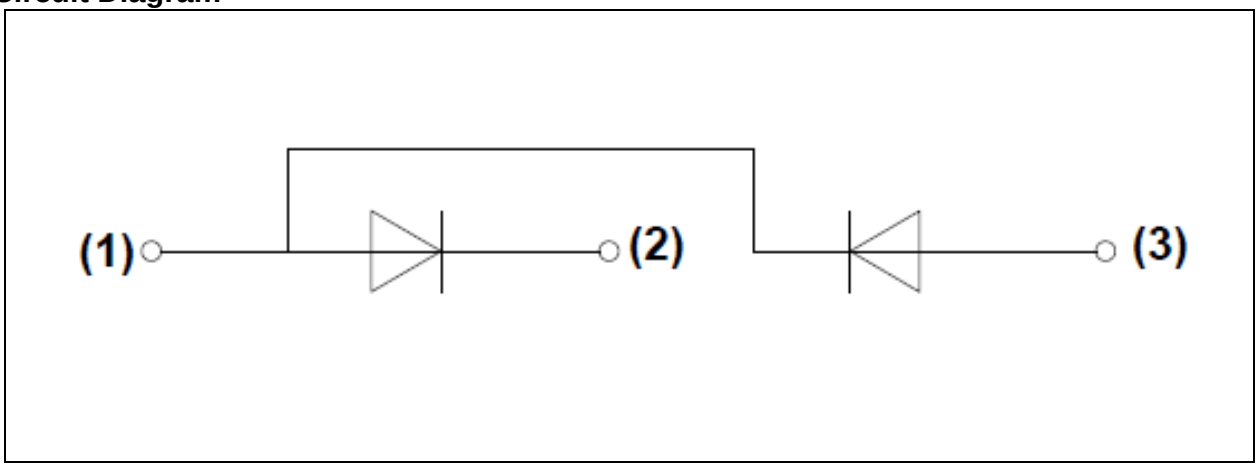




Jiangsu JieJie Microelectronics Co., Ltd.
All product information are copyrighted and subject to legal disclaimers

## Package Outlines (mm)


All product information are copyrighted and subject to legal disclaimers

Information furnished in this document is believed to be accurate and reliable. However, Jiangsu JieJie Semiconductor Co., Ltd assumes no responsibility for the consequences of use without consideration for such information nor use beyond it. This information in this document is subject to change without prior notice. Notwithstanding this, Jiangsu JieJie will fully comply with the terms outlined in a signed agreement. Products and information provided in this document have no infringement of patents. Jiangsu JieJie assumes no responsibility for any infringement of other rights of third parties which may result from the use of such products and information. This document is the initial release, dated 21 May 2026. This document supersedes and replaces all information previously supplied.

is registered trademark of Jiangsu JieJie Semiconductor Co., Lt ©2026 Jiangsu JieJie Semiconductor Co., Ltd. All rights reserved.