	℃					
	℃					
	℃					
						Ω

FIG.1: Forward characteristics(per diode)

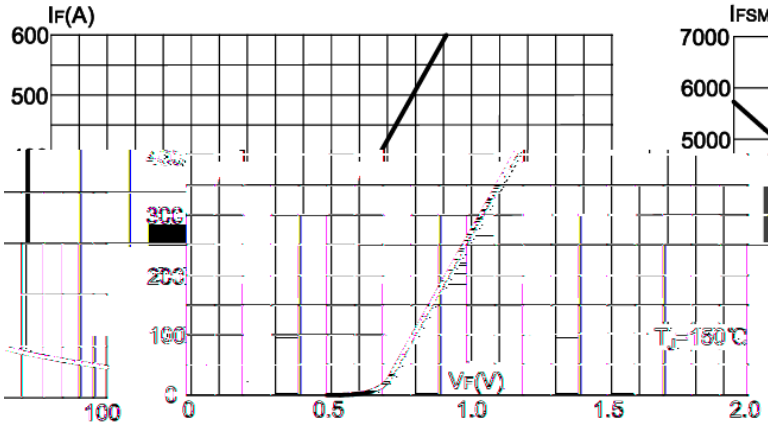
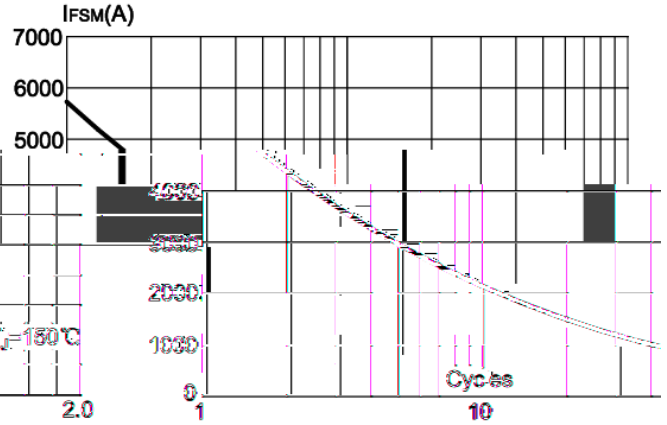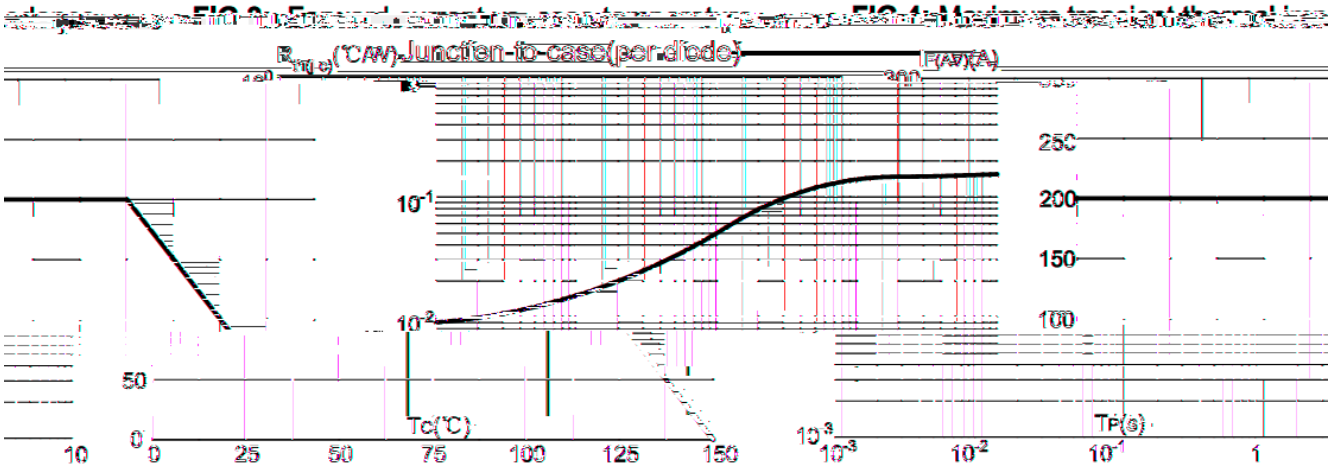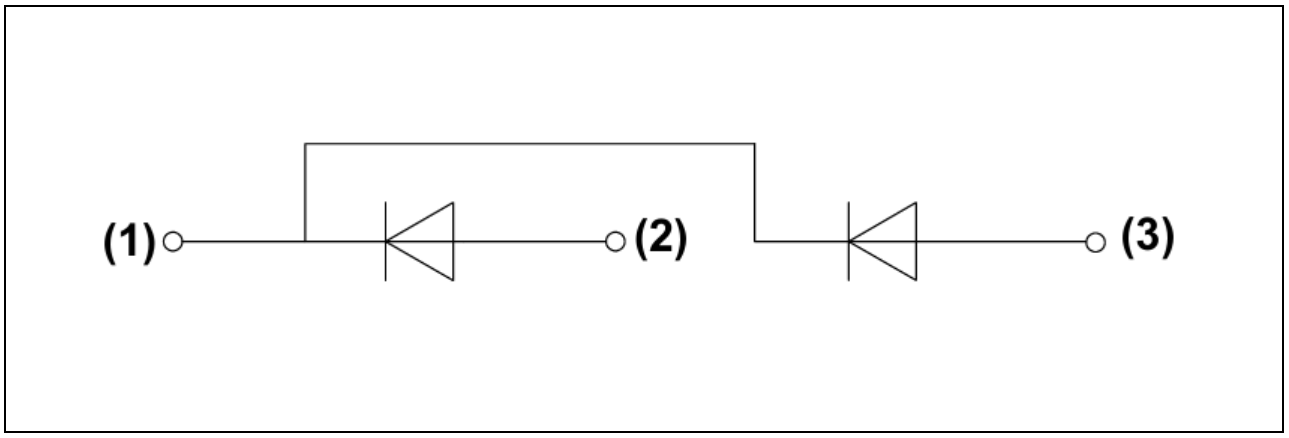
FIG.2: Peak on-state surge current