℃		

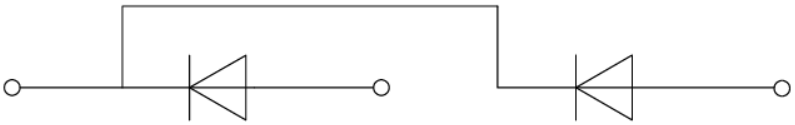

	℃			

FIG.1: Forward characteristics(per diode)

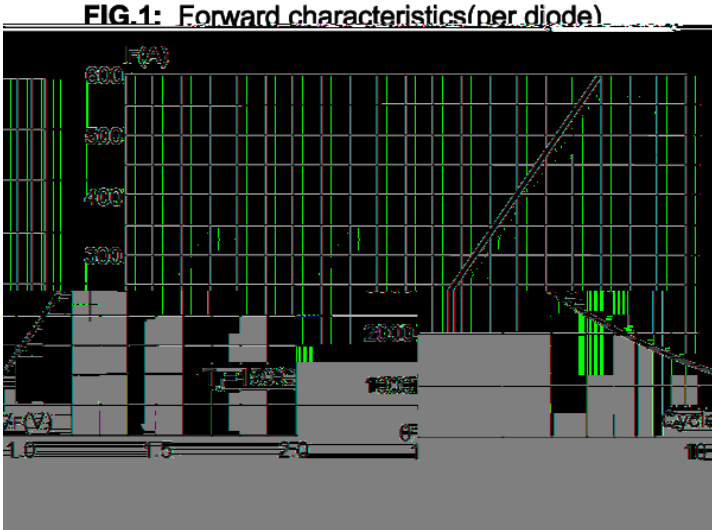

FIG.2: Peak on-state surge current

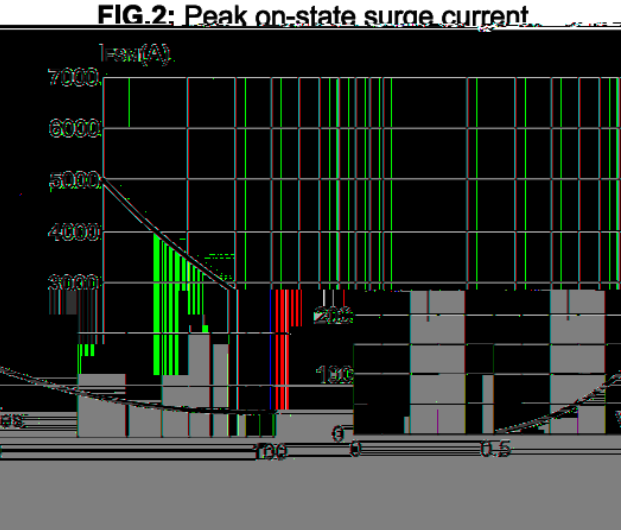

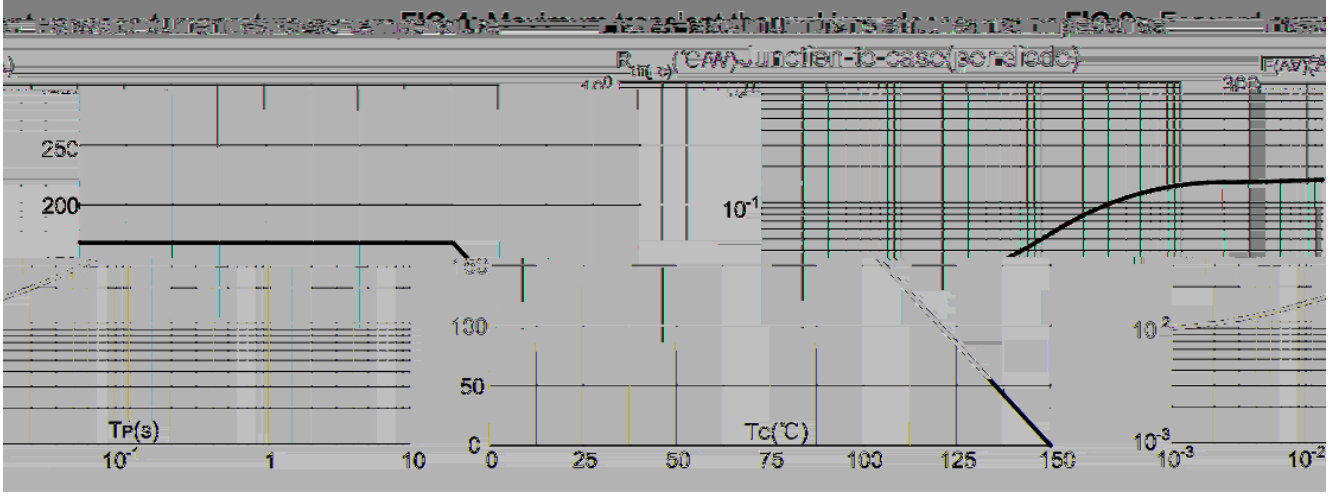

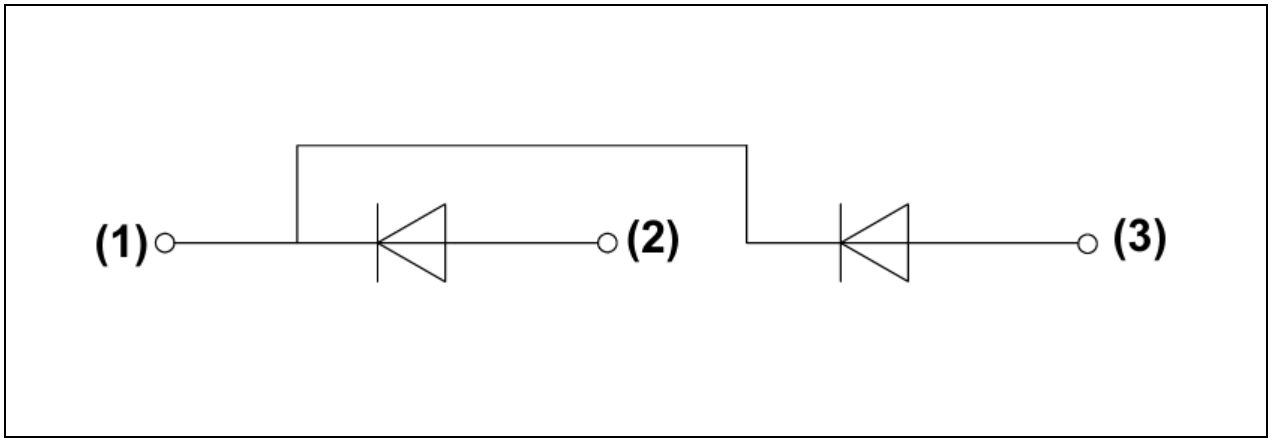

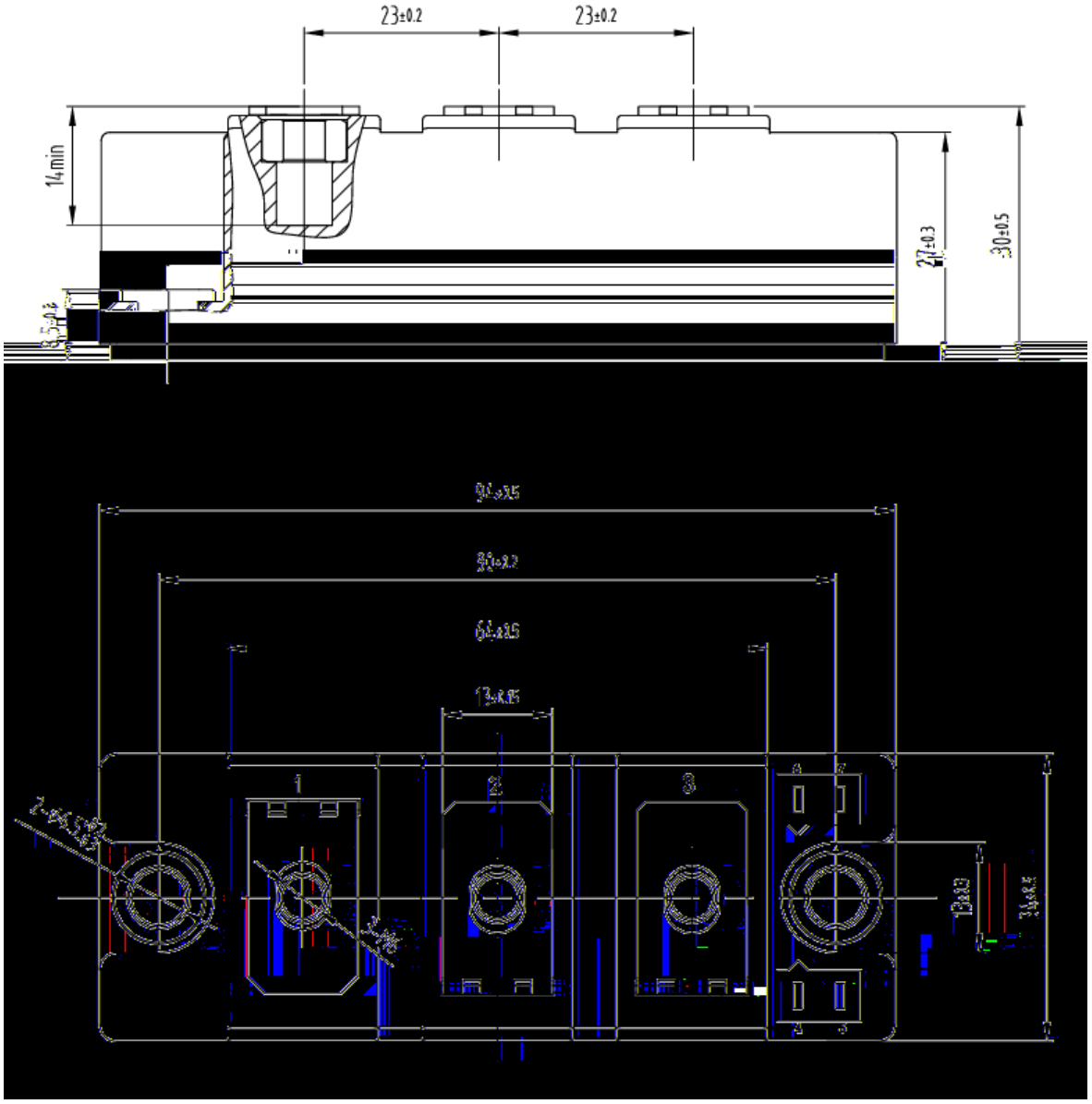
23±0.2
23±0.2
14min
27±0.3
30±0.5
1
2
3