JMD120ND18T1A

Diode Module

Features

Product Summary

Parameter	

Applications

Absolute Maximum Ratings

Parameter	Conditions	Symbol	Values	Unit
	℃			

Electrical Characteristics

Parameter	Conditions	Symbol	Values			Unit
			Min.	Typ.	Max.	

Typical Electrical & Thermal Characteristics

FIG.1: Forward characteristics(per diode)

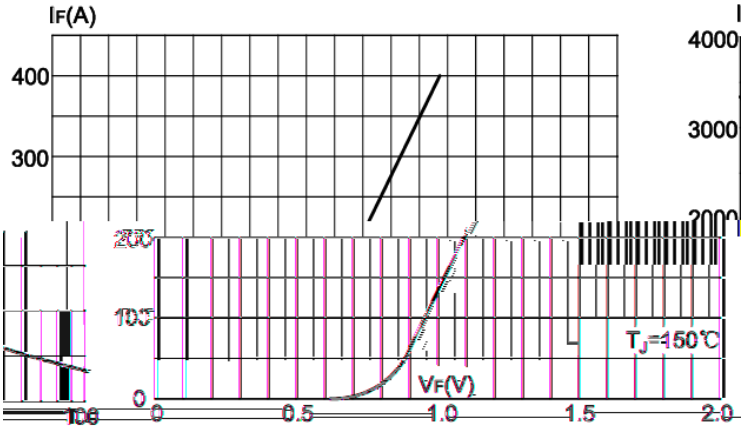

FIG.2: Peak forward surge current

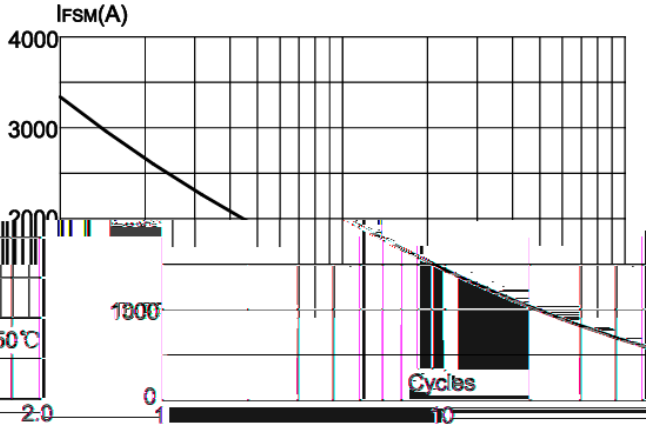

lance

FIG.3: Forward current vs. case temperature

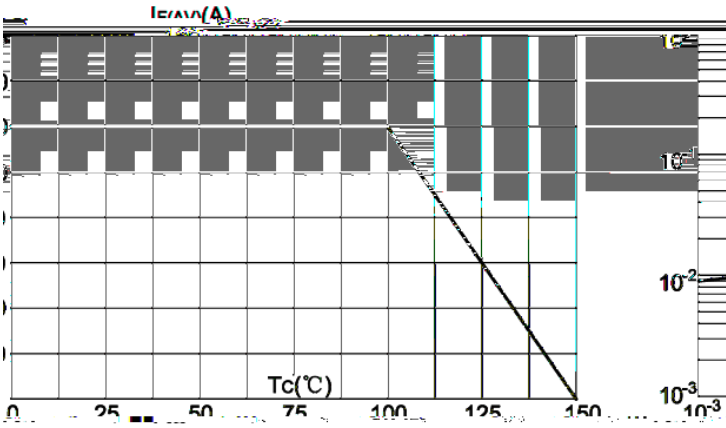

FIG.4: Maximum transient thermal impedance

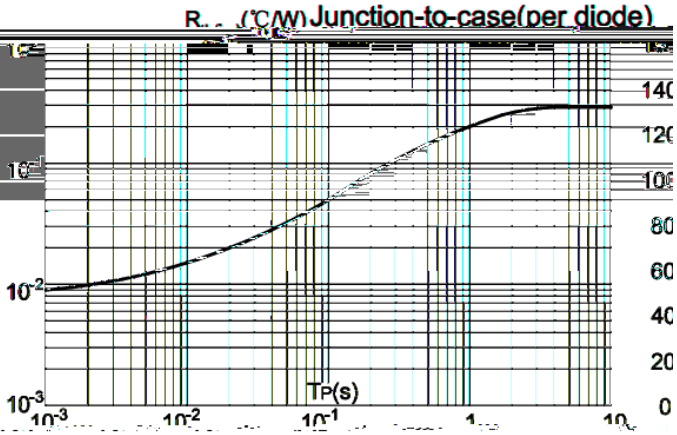

Circuit Diagram

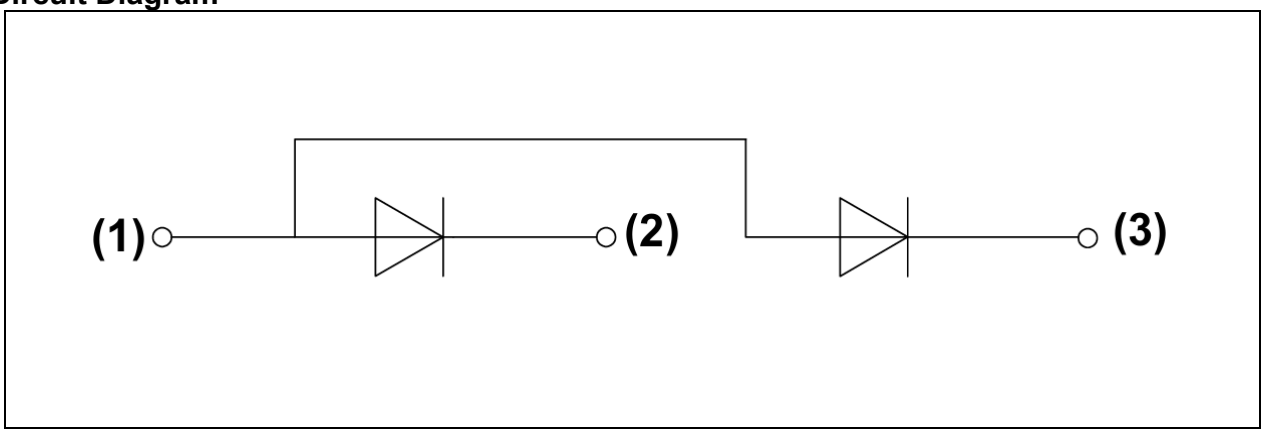
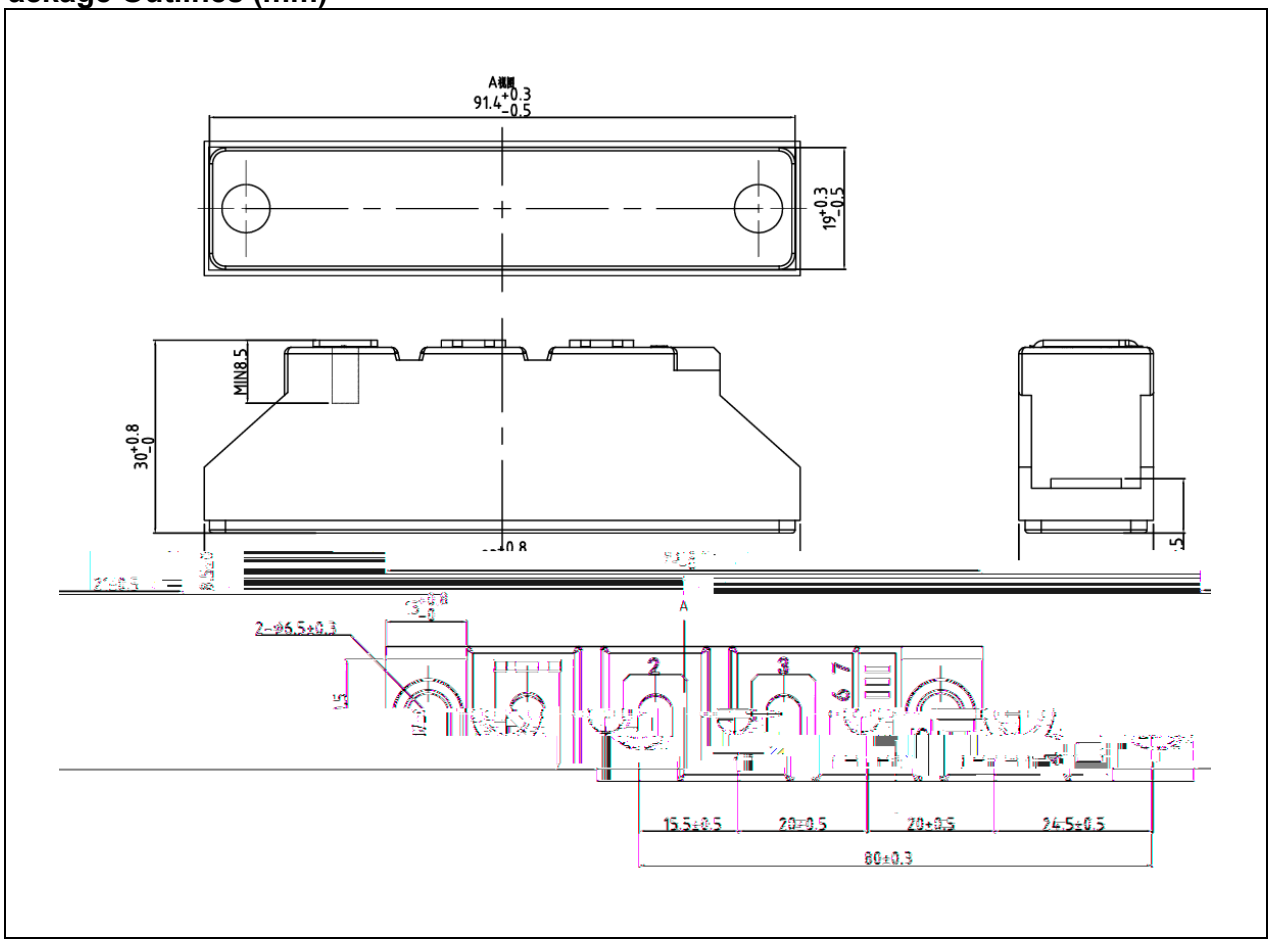
Package Outlines (mm)