	℃			

FIG 1: Forward characteristics(per diode)

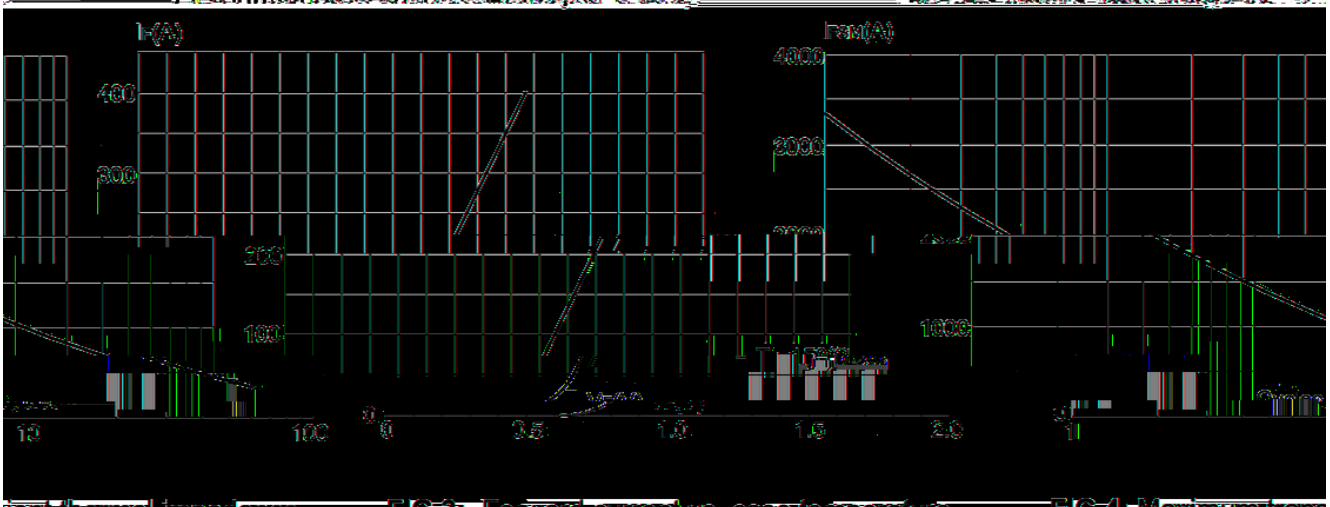

FIG 2: Peak on-state surge current

FIG 3: Transient thermal impedance junction to case(per diode)

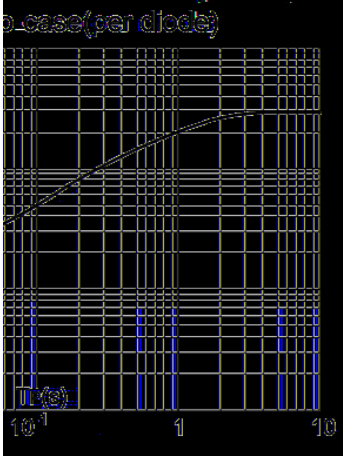

FIG 5: Forward current vs. case temperature

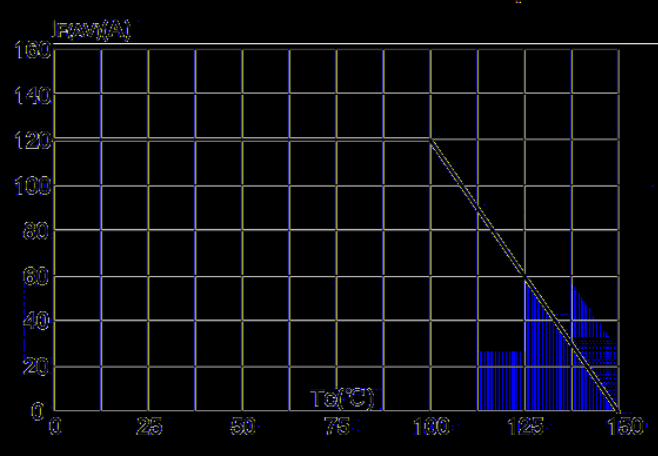

FIG 4: Maximum transient thermal impedance, Junction to case(per diode)

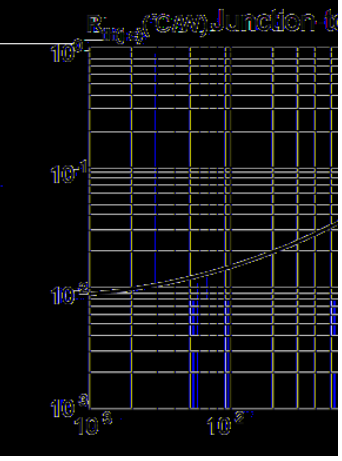

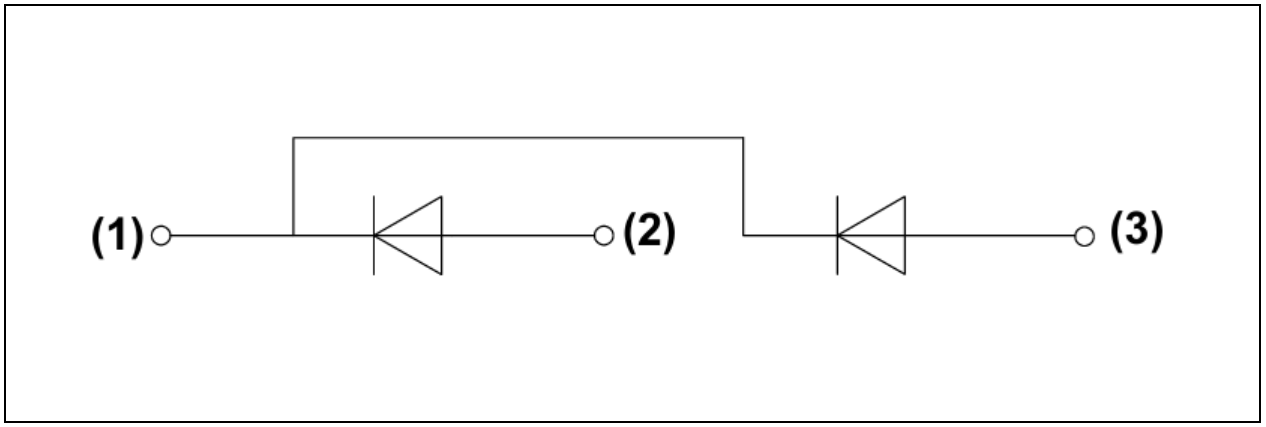

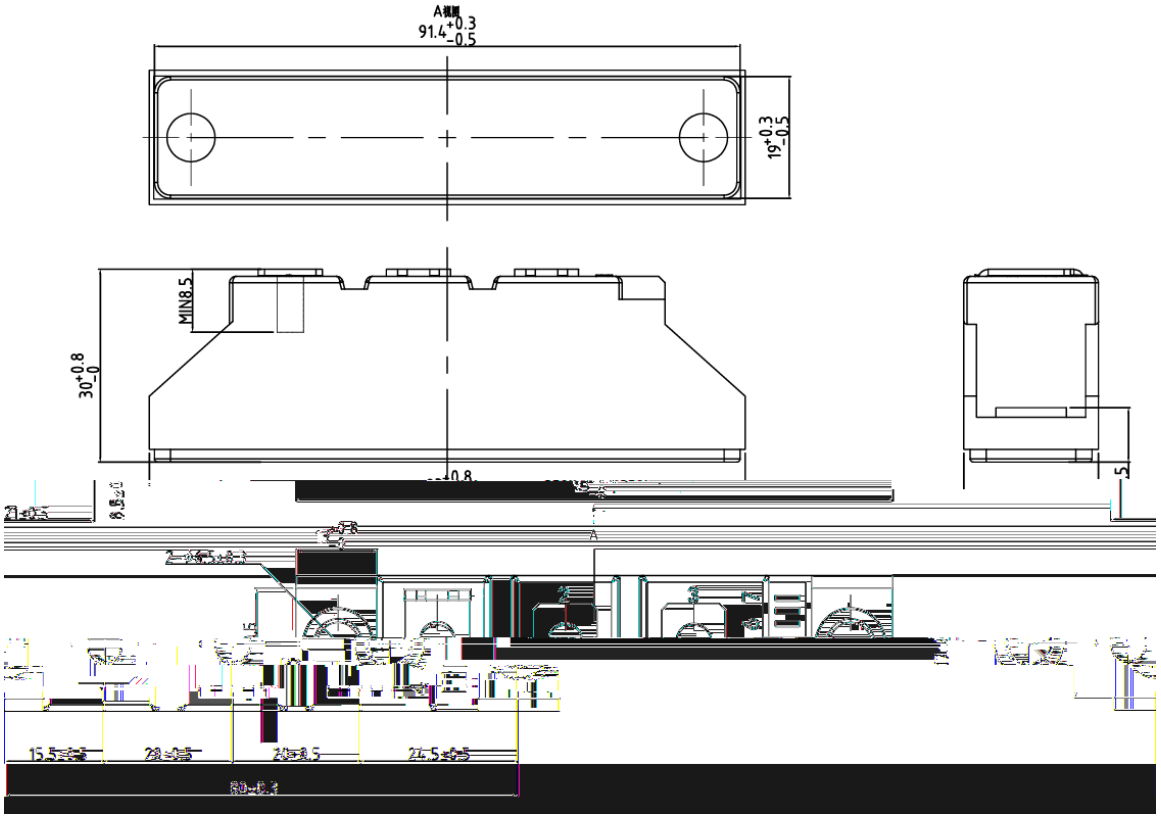
A視圖
91.4+0.3 -0.5
19+0.3 -0.5
MIN8.5
30+0.8 -0
5