Features

Product Summary

Electrical Characteristics

Parameter	Conditions	Symbol	Values			Unit
			Min.	Typ.	Max.	
	℃					
	℃					
	℃					
	℃					

Thermal Characteristics

Parameter	Conditions	Symbol	Values			Unit
			Min.	Typ.	Max.	
						℃

Ordering Information

Device	Marking	Package	Weight	Inner Box	Per Carton

Typical Electrical & Thermal Characteristics

FIG.1: Forward characteristics(per diode)

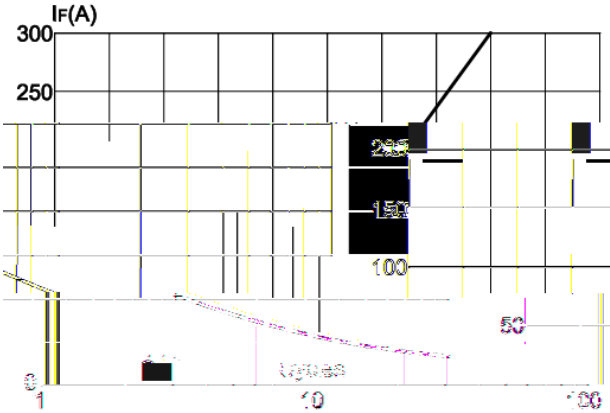

FIG.2: Peak on-state surge current

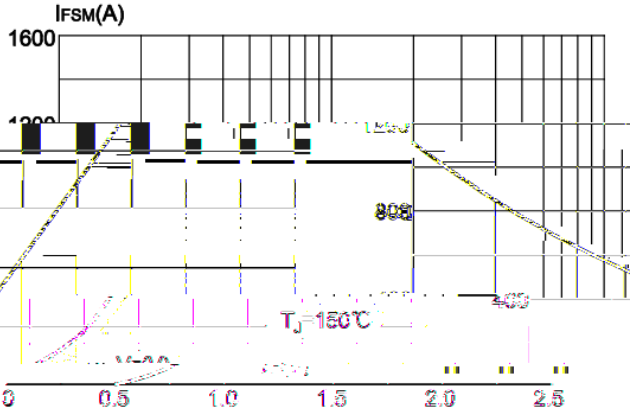

FIG.4: Maximum transient thermal impedance

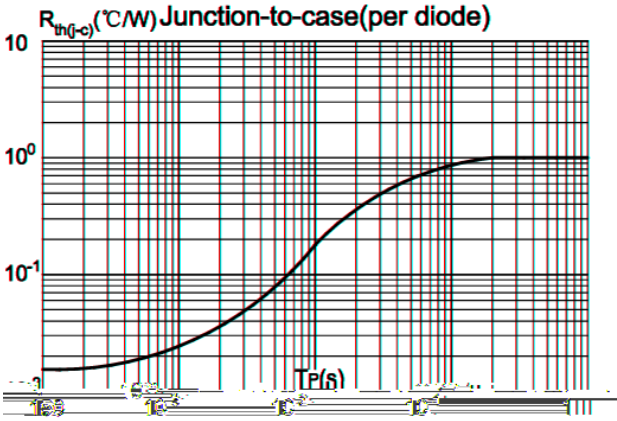

FIG.3: Forward current vs. case temperature

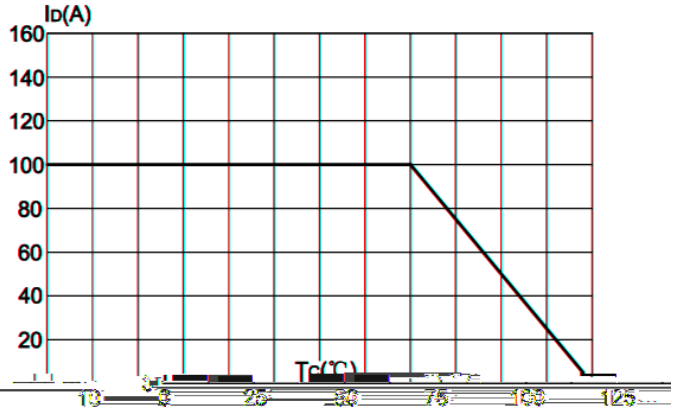

Circuit Diagram

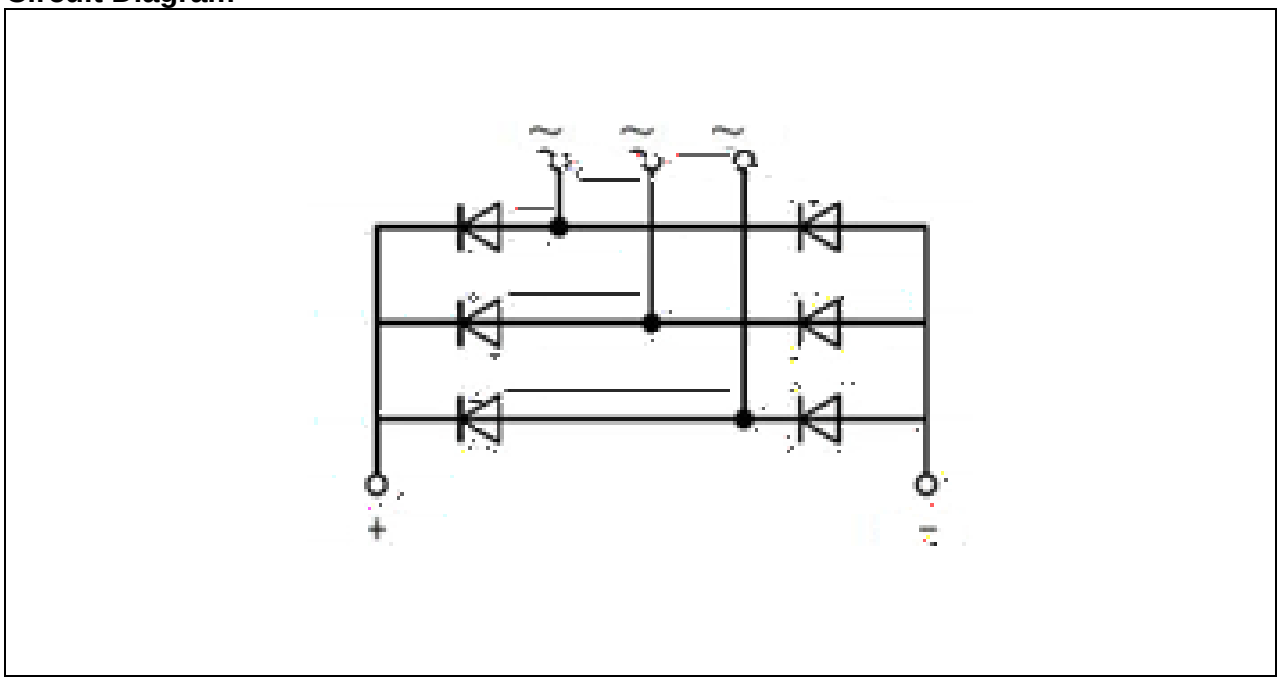
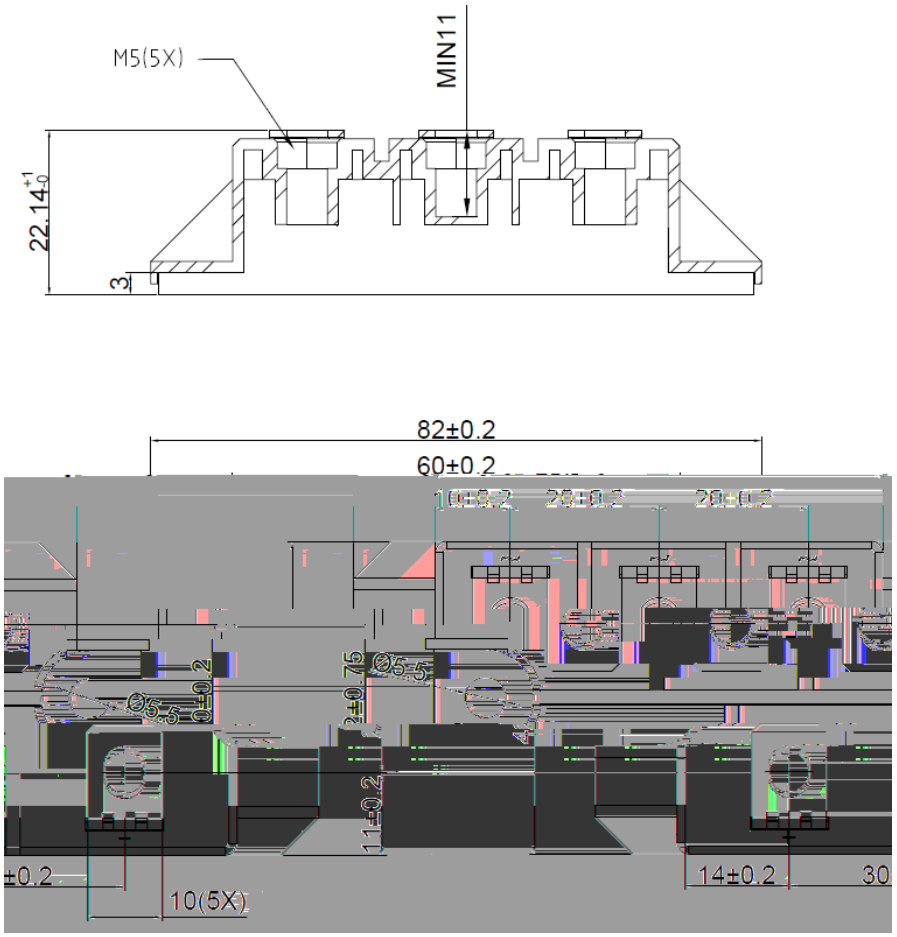
Package Outlines (mm)