DESCRIPTION:

The products are voltage opto-couplers in a plastic SOP4 package. The device consists of a high-voltage output detector circuit.It is capable of directly driving gates of power MOSFETs or IGBTs. The products are widely used in supply for electronic circuit and drive solid state relay.

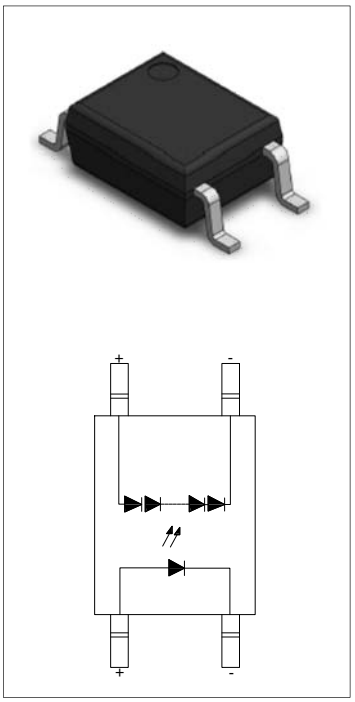

MAIN FEATURES

High isolation 3750 VRMS
Operating temperature range -40°C to 110°C
RoHS & REACH Compliance
HBM: H3A; MM: M4; CDM: C3
CQC approved
VDE approved
UL approved

ABSOLUTE MAXIMUM RATINGS (Temperature=25°C)

Input	Forward Current	I_F	50	mA
	Peak Forward Current	I_{FP}	1	A
	Reverse Voltage	V_R	6	V
	Power Dissipation	P_D	75	mW
Isolation Voltage		V_{iso}	3750	Vrms
Operating Temperature		T_{opr}	-40~+110	
Junction Temperature		T_j	125	
Storage Temperature		T_{stg}	-55~+125	
Soldering Temperature		T_{sol}	260	

NOTE1: 100μs pulse, 100Hz frequency
NOTE2: AC for 1minute, R.H.=40~60%

ELECTRICAL CHARACTERISTICS (Temperature=25°C)

Input	Forward Voltage	V_F	I_F=10mA	-	1.2	1.5	V
	Reverse Current	I_R	V_R=6V	-	-	1	μA
Output	Open Circuit Voltage	V_{OC}	I_F=10mA I_O=0mA	11	-	-	V
	Short Circuit Current	I_{SC}	I_F=10mA V_O=0V	10	-	-	μA
Transfer Characteristics	Isolation resistance	R_{IO}	DC500V 40~60%R.H.	10^{12}	-	-	Ω
	Response Time	t_{on}	I_F=10mA C_L=1000pF, R_{SH}=510kΩ	-	100	-	μs
		t_{off}		-	50	-	μs

ORDERING INFORMATION

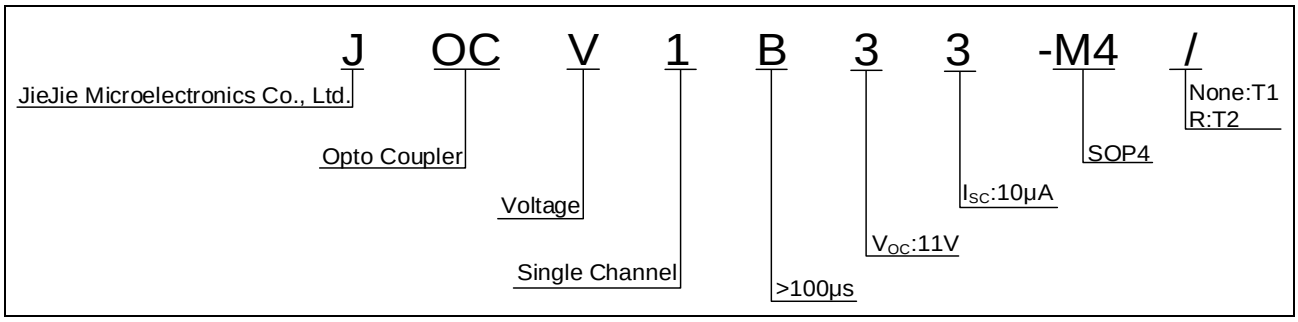

Packing Quantity			
Option	**Quantity**	**Quantity – Inner box**	**Quantity –Outer box**
SOP4	3000 Units/Reel	2 Reels/Inner box	5 Inner box/Outer box =30k Units

MARKING

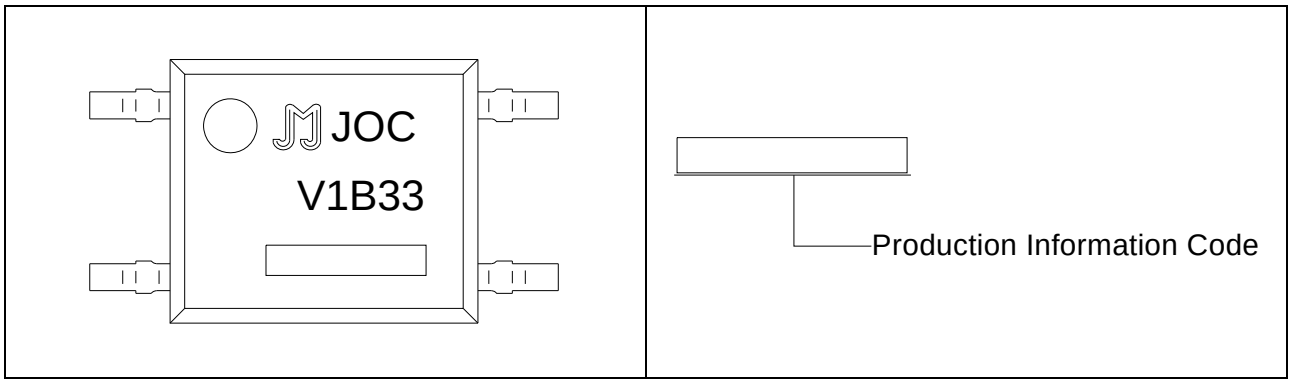

Characteristics Curves

Max. Allowable LED Forward Current vs. Ambient Temperature

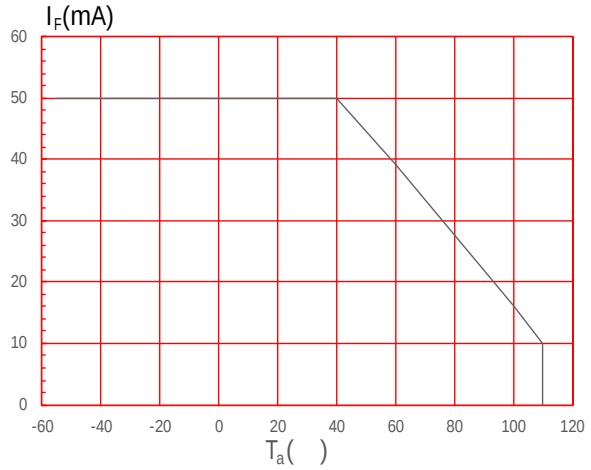

Forward Current vs. Forward Voltage

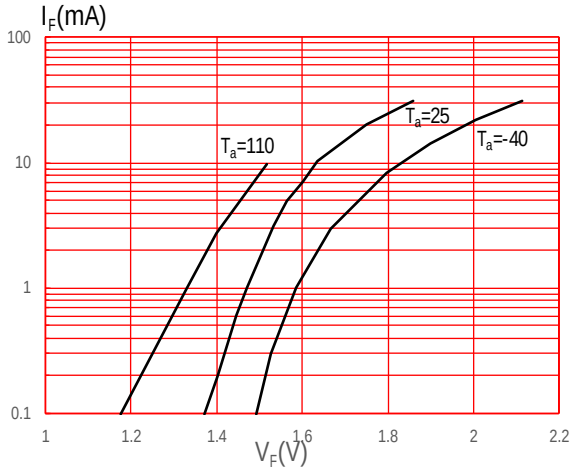

Open Circuit Voltage vs. Forward Current

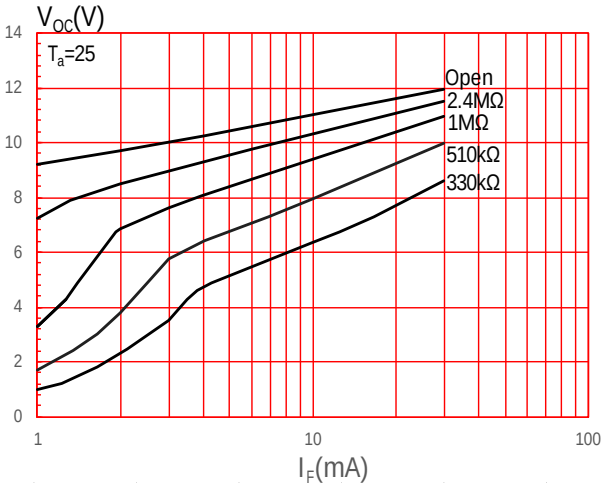

Short Circuit Current vs. Forward Current

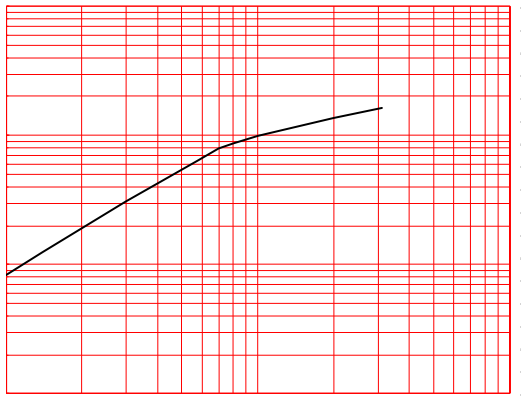

Test Circuits

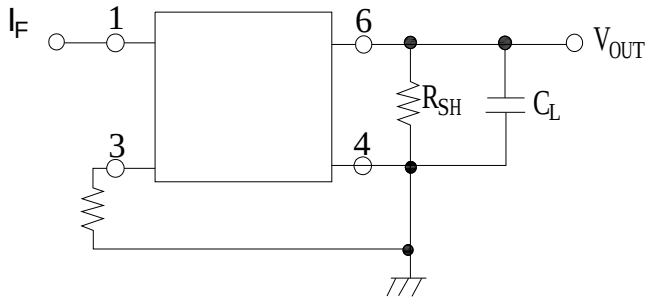

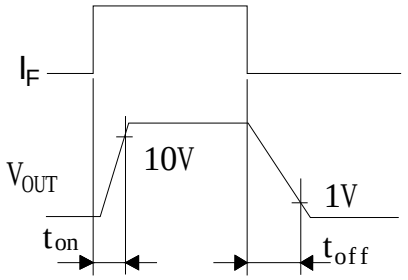

Package Dimension (Unit: mm)

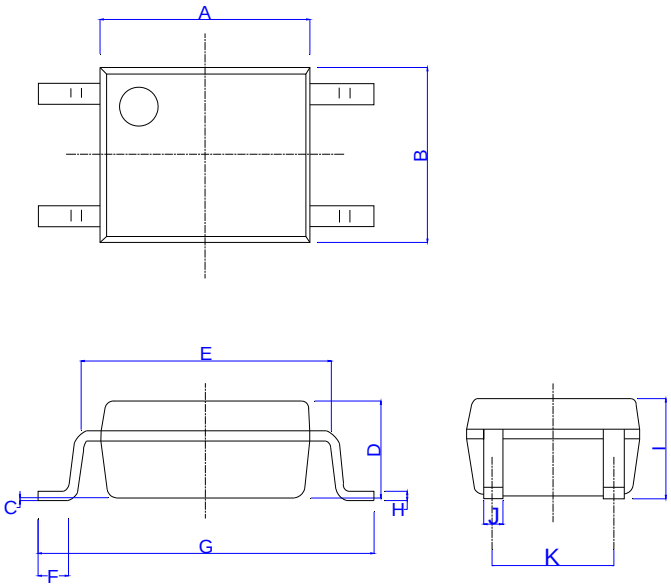

Ref.	Dimensions					
	Millimeters			Inches		
	Min.	Typ.	Max.	Min.	Typ.	Max.
A	4.40		4.80	0.173		0.189
B	3.60		4.20	0.142		0.165
C	0.00		0.20	0.000		0.008
D	1.90		2.30	0.075		0.091
E	5.00		5.60	0.197		0.220
F	0.34		0.94	0.013		0.037
G	6.70		7.30	0.264		0.287
H	0.10		0.30	0.004		0.012
I	2.00		2.40	0.079		0.094
J	0.25		0.55	0.010		0.022
K	2.29		2.79	0.090		0.110

RECOMMENDED SOLDER MASK (Dimensions in mm unless otherwise stated)

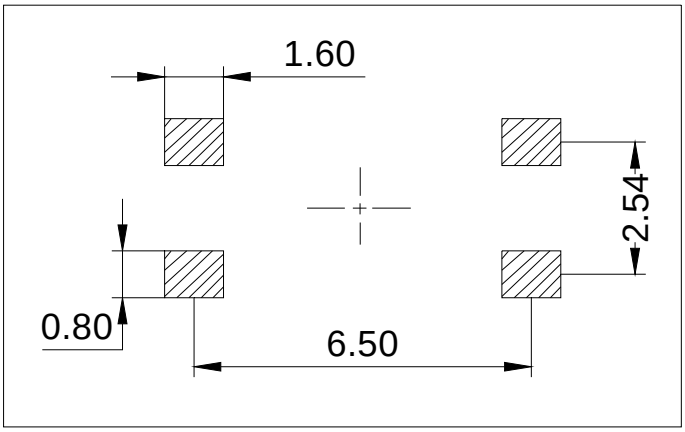

CARRIER TAPE SPECIFICATIONS (Dimensions in mm unless otherwise stated)

REFLOW INFORMATION

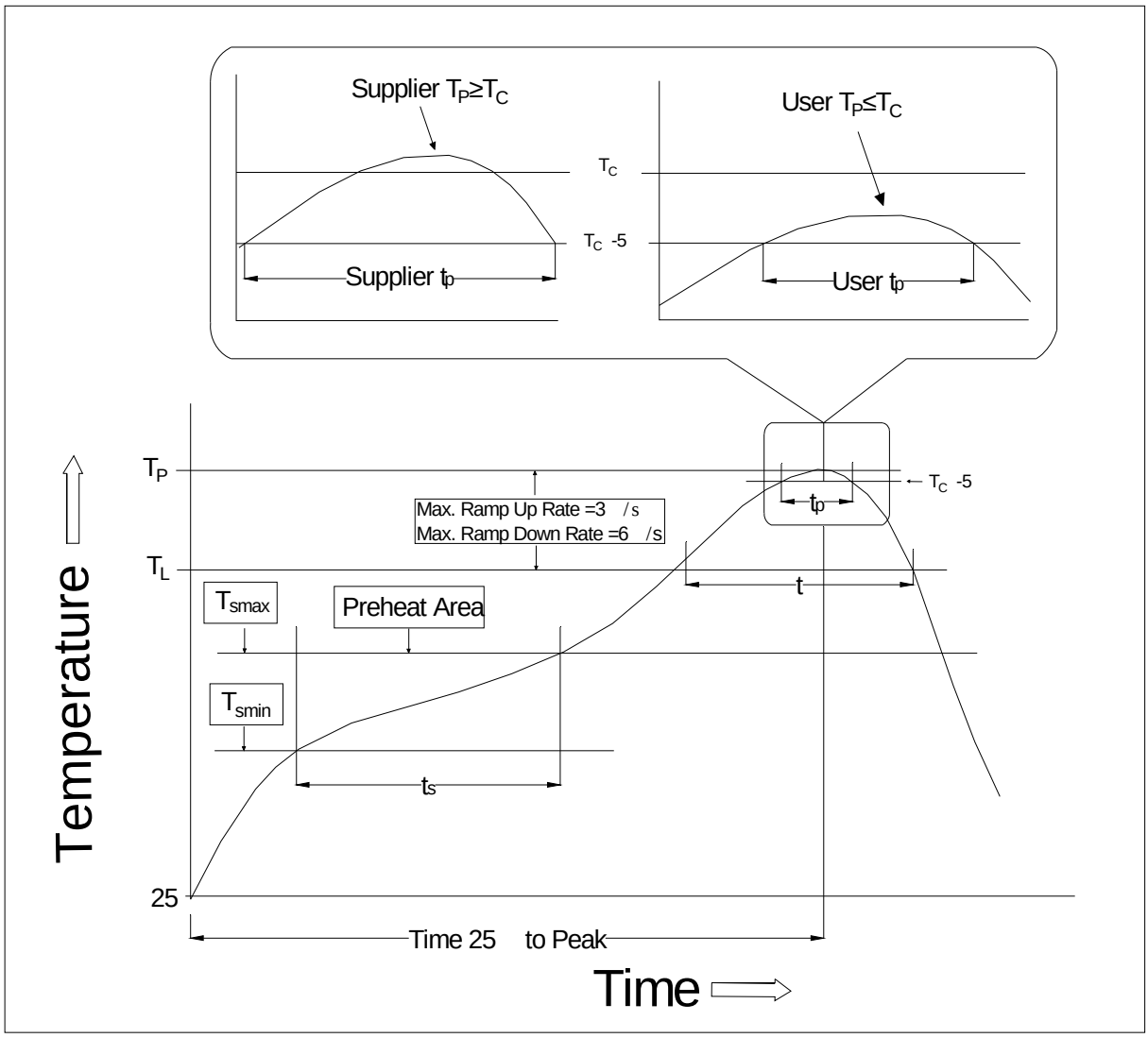

Temperature Min. (Tsmin)	100	150
Temperature Max. (Tsmax)	150	200
Time (ts) from (Tsmin to Tsmax)	60-120 seconds	60-120 seconds
Ramp-up Rate (tL to tP)	3 /second max.	3 /second max.
Liquidus Temperature (TL)	183	217
Time (tL) Maintained Above (TL)	60-150 seconds	60-150 seconds
Peak Body Package Temperature	235 +0 /-5	260 +0 /-5
Time (tP) within 5 of 260	10 seconds	10 seconds
Ramp-down Rate (TP to TL)	3-6 /second	3-6 /second
Time 25 to Peak Temperature	6 minutes max.	8 minutes max.

Note:

1. Reflow soldering is recommended at the temperatures and times shown, no more than three times.

2. Avoid direct contact between the epoxy body and any tools or surfaces exceeding its maximum storage temperature.

3. Application of pressure on the epoxy body is prohibited at elevated temperatures. In specific scenarios, any applied force must not exceed 2.5N.

4. Ensure the component has cooled to ambient temperature before proceeding with any subsequent manufacturing steps.

5. The component has a shelf life of one year when stored under standard conditions.

6. Recommend storage Temp.: 0~40°C;

   Recommend storage humidity: <60%;

   MSL level: MSL 1

Information furnished in this document is believed to be accurate and reliable. However, Jiangsu JieJie Microelectronics Co., Ltd. assumes no responsibility for the consequences of use without consideration for such information nor use beyond it. Information mentioned in this document is subject to change without notice, apart from that when an agreement is signed, Jiangsu JieJie complies with the agreement.

Products and information provided in this document have no infringement of patents. Jiangsu JieJie assumes no responsibility for any infringement of other rights of third parties which may result from the use of such products and information. This document supersedes and replaces all information previously supplied.

is a registered trademark of Jiangsu JieJie Microelectronics Co., Ltd.

Copyright © 2026 Jiangsu JieJie Microelectronics Co., Ltd. All rights reserved.