JOCMB83Ch-D8P/S Series

Rev.A.1.0

DESCRIPTION:

MAIN FEATURES

ABSOLUTE MAXIMUM RATINGS

Parameter		Symbol	Value	Unit
			①	
			②	

			℃

NOTE1: 100μs pulse, 100Hz frequency
NOTE2: AC for 1minute, R.H.=40~60%

ELECTRICAL CHARACTERISTICS

Parameter		Symbol	Condition	Min.	Typ.	Max.	Unit

ORDERING INFORMATION

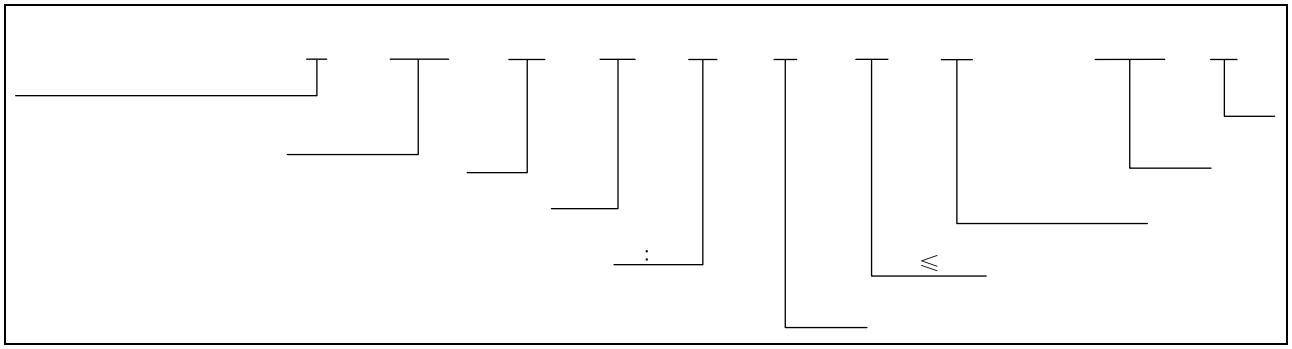

Packing Quantity			
Option	**Quantity**	**Quantity – Inner box**	**Quantity –Outer box**
DIP	50 Units/Tube	40 Tubes/Inner box	5 Inner box/Outer box =10k Units
SMD	1200 Units/Reel	2 Reels/Inner box	5 Inner box/Outer box =12k Units

MARKING

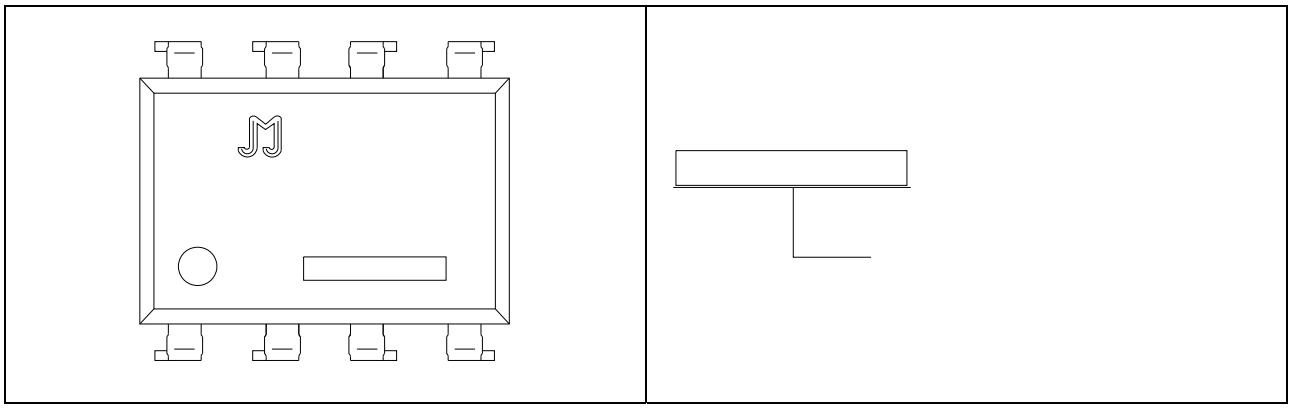

Characteristics Curves

FIG.1:

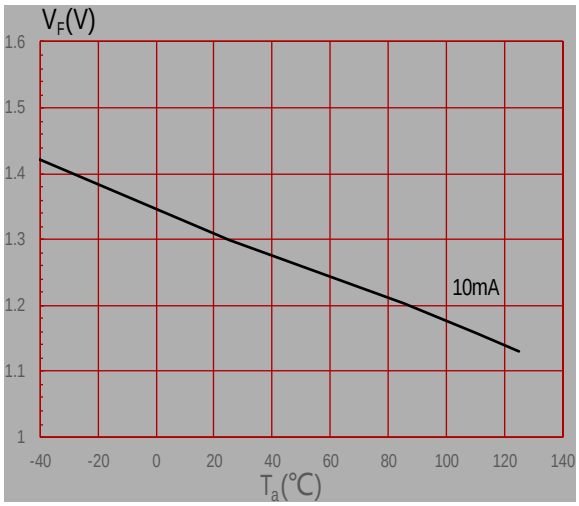

FIG.2:

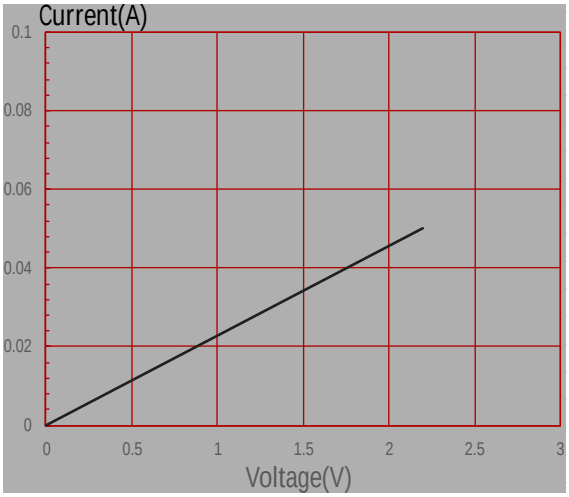

FIG.3:

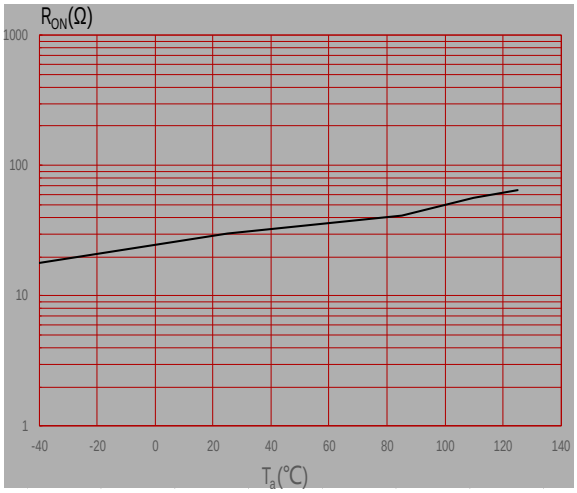

FIG.4:

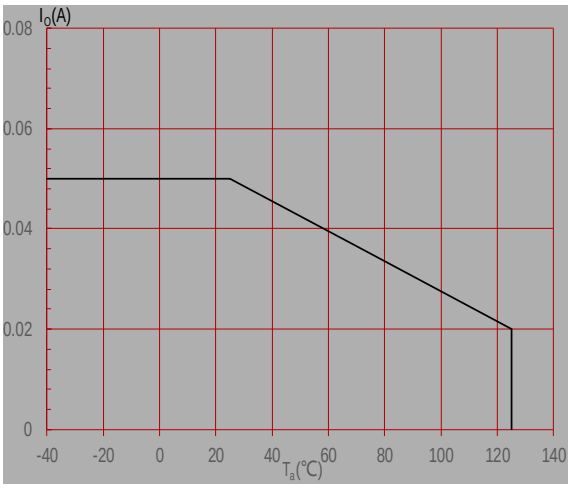

FIG.5:

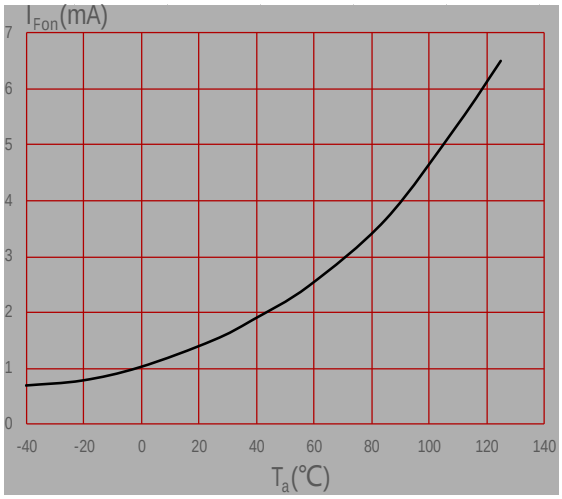

FIG.6:

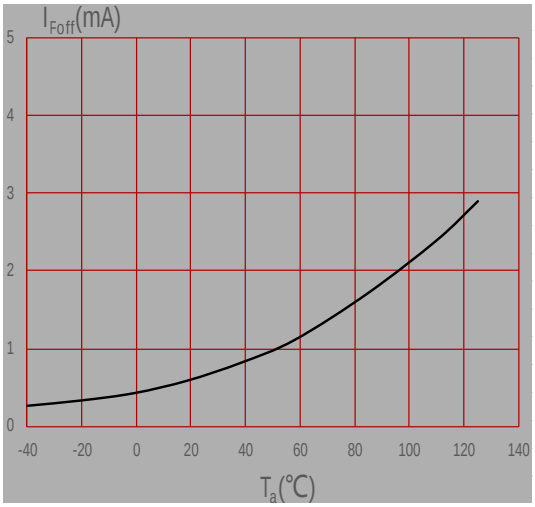

FIG.7:

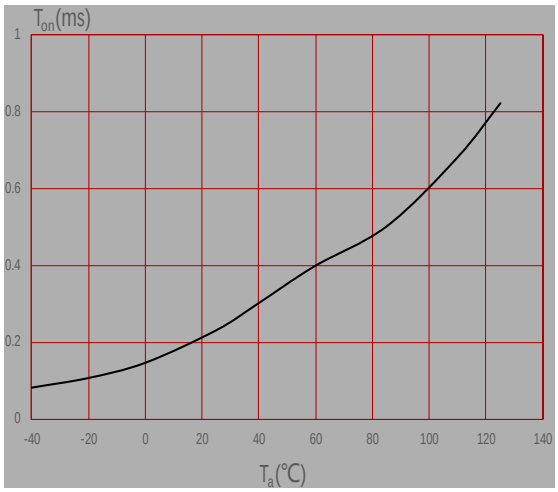

FIG.8:

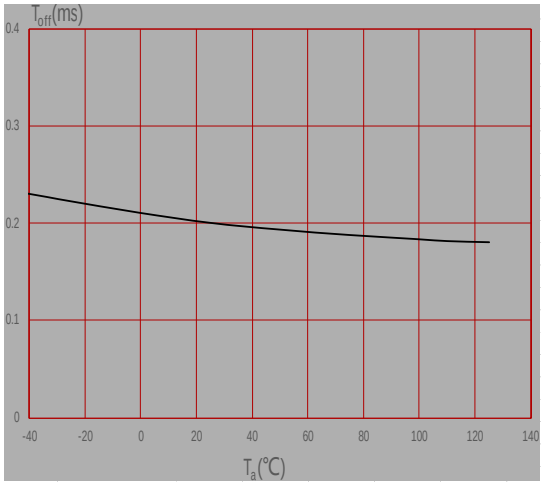

FIG.9:

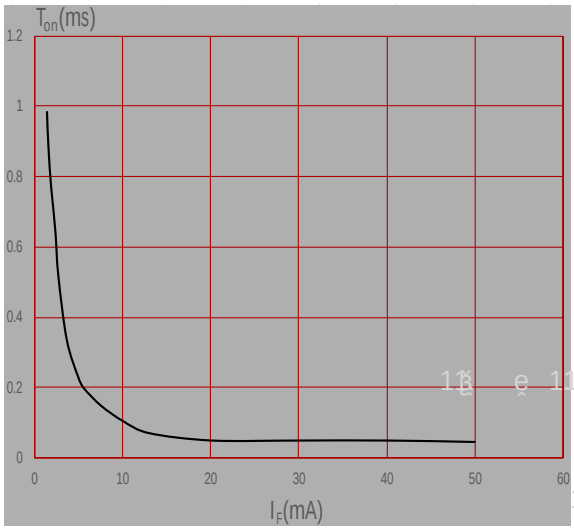

FIG.10:

Package Dimension (Unit: mm)

Standard DIP Type:

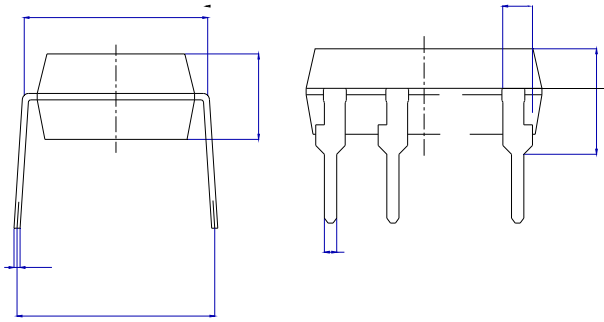

RECOMMENDED SOLDER MASK (Dimensions in mm unless otherwise stated)

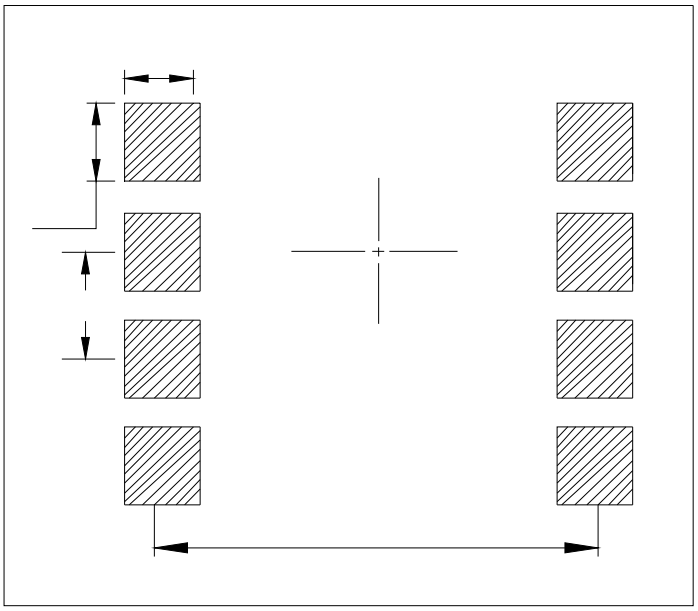

TUBE SPECIFICATIONS (Dimensions in mm unless otherwise stated)

Standard DIP

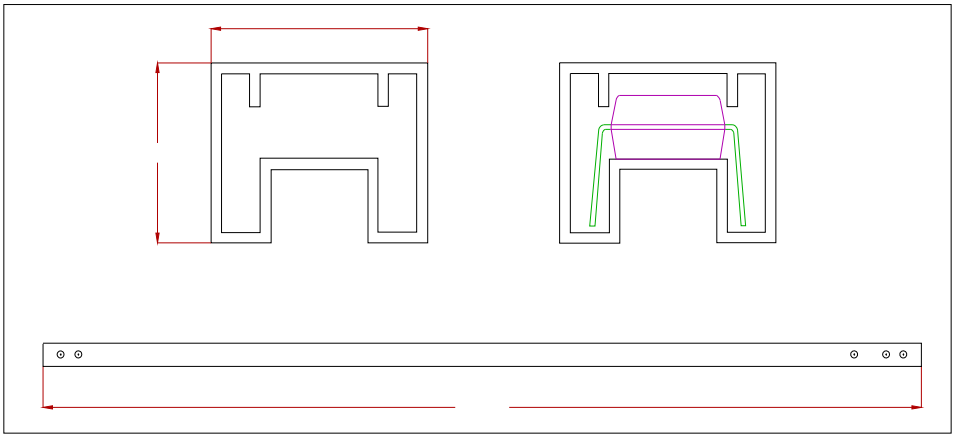

CARRIER TAPE SPECIFICATIONS (Dimensions in mm unless otherwise stated)

Option S

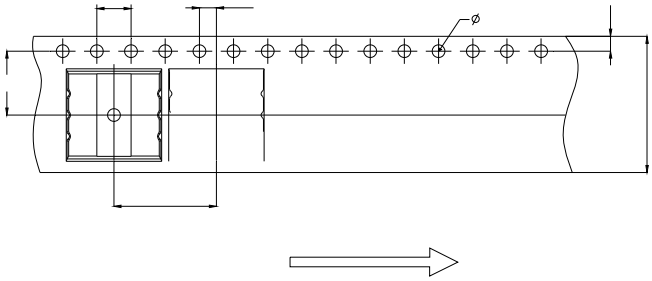

REFLOW INFORMATION

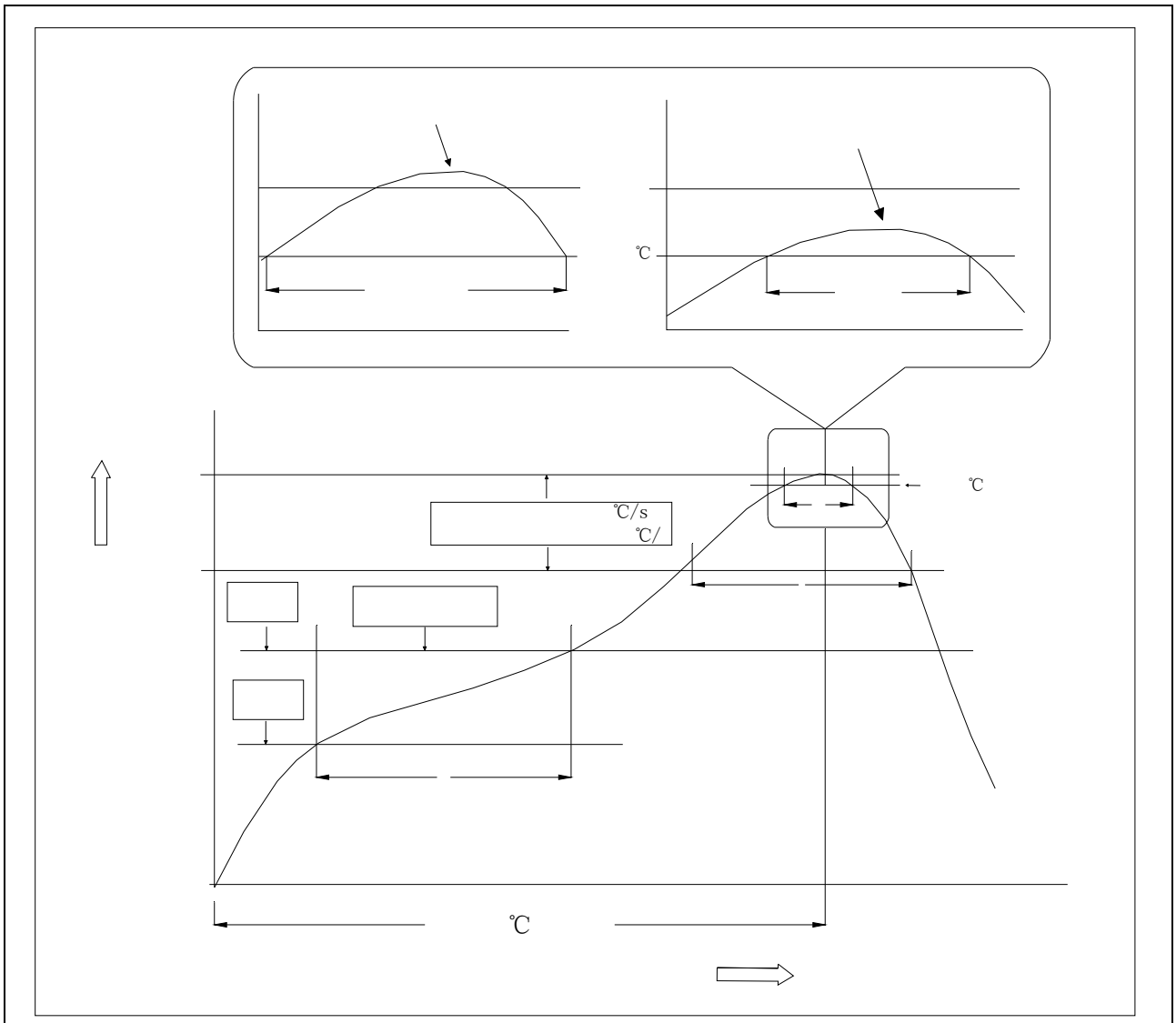

Profile Feature	Sn-Pb Assembly Profile	Pb-Free Assembly Profile
	℃	℃
	℃	℃
	℃	℃
	℃	℃
	℃ ℃ ℃	℃ ℃ ℃
℃ ℃		
	℃	℃
℃		

WAVE SOLDERING

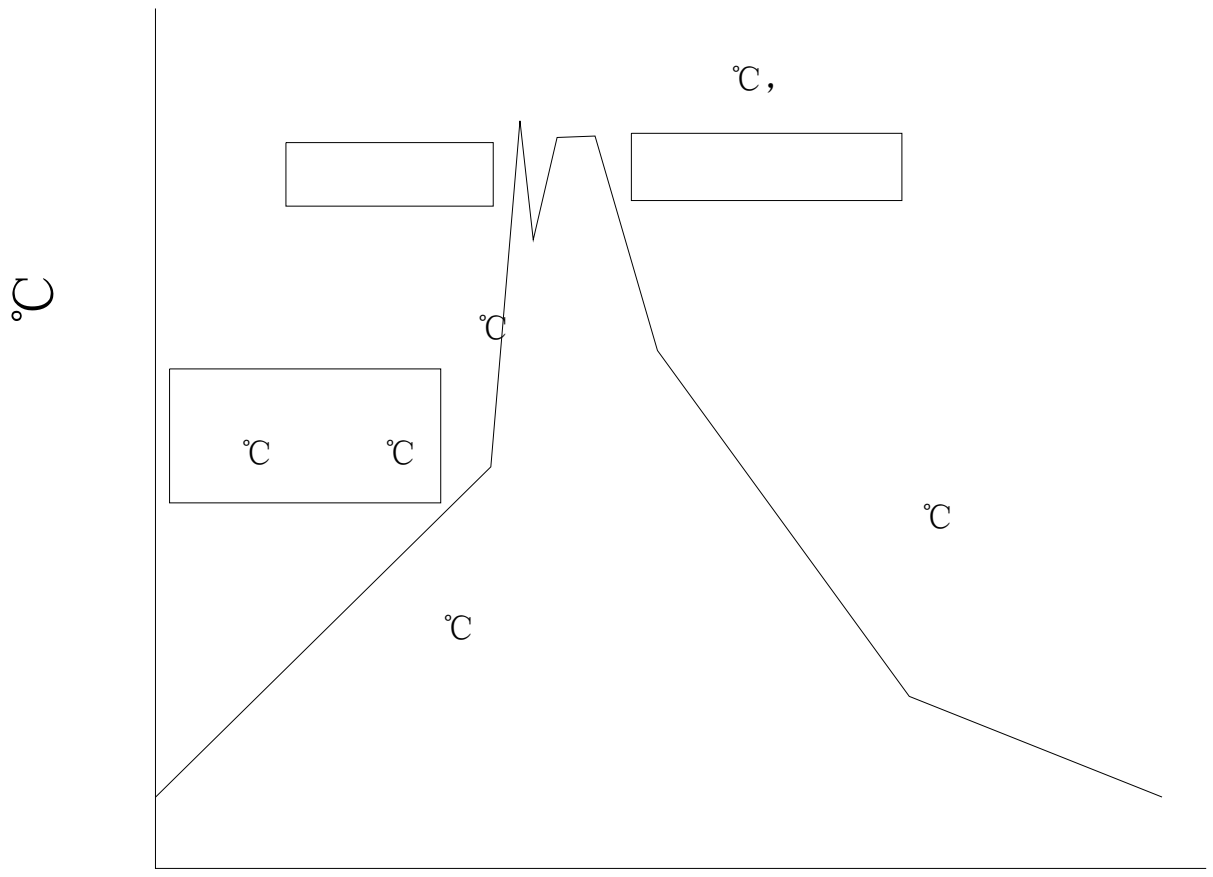

HAND SOLDERING BY SOLDERING IRON	
	± ℃