2XWSXW	6XSSO\ 9ROWDJH	&&	9	
	2XWSXW 9ROWDJH	92		
	2XWSXW &XUUHQW	,2		
	2XWSXW 3RZHU 'LVVLSDWLRQ	3		P:
7RWDO 3RZHU 'LVVLSDWLRQ		3WRW		P:
,VRODWLRQ 9ROWDJH		9LVR	8	9UPV
2SHUDWLQJ 7HPSHUDWXUH		7RSU	a	
-XQFWLRQ 7HPSHUDWXUH		7M		
6WRUDJH 7HPSHUDWXUH		7VWJ	a	
6ROGHULQJ 7HPSHUDWXUH		7VRO		

NOTE1 íìì • ‰µo• U íìì,Ì (Œ ‹µ v Ç
NOTE2 (}Œ íu]vµš U ZX,XAðì•òì9

ELECTRICAL CHARACTERISTICS (Temperature = 25ÁC)

Parameter		Symbol	Condition	Min.	Typ.	Max.	Unit
Input	Forward Voltage	V	I_F = 10mA	-	1.35	1.6	V
	Reverse Current	I	V_R = 6V	-	-	1	εA
	Input Capacitance	C	V = 0, f = 1MHz	-	60	-	pF
Output	Current transfer ratio	CTR	I_F = 16mA, V_{CC} = 4.5V, V_O = 0.4V	300	-	-	%
	High Level Kµš‰µš &XUUHQW	,2+	,) P$ && 9 92 9				Q$
			,) P$ && 9 92 9				$
	/RZ /HYHO 6XSSO\ &XUUHQW	,&&/	92 2SHQ 9&& 9 ,) P$				P$
	+LJK /HYHO 6XSSO\ &XUUHQW	,&&+	92 2SHQ 9&& 9 ,) P$				$
	/RJLF /RZ 2XWSXW 9ROWDJH	92/	,) P$ 2, P$ 9&& 9				9
	,VRODWLRQ 5HVLVWDQFH	5,62	'& 9 a 5 +				
	)ORDWLQJ &DSDFLWDQFH	&,2	9 I 0+]				S)
6ZLWFKLQJ &KDUDFWHULVWLFV	3URSDJDWLRQ 'HOD\ 7LPH &XUUHQW &RQVXPSWLRQ /RJLF /RZ	73+/	,) P$ 5/ N 9&& 9				V

	3 U R S D J D W L R Q ' H O D \ 7 L P H W R / R J L F + L J K	7 3 / +	) P $ 5/ N 7 L "³&4 U 9&& P P X Q L c Fu†fŽó‡d / 9					V

& R P P R Q 0 R G H
7 U D Q V L H Q W
, P P X Q L c Fu†fŽó‡d /

ORDERING INFORMATION

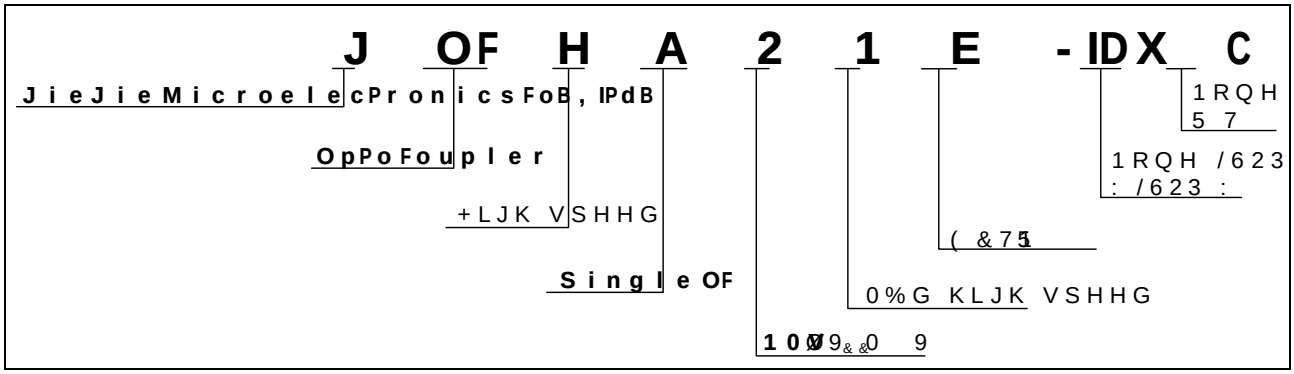

Packing Quantity			
Option	Quantity	Quantity – Inner box	Quantity –Outer box
>^KW	ñ ïìì hv]š•lZ o î Z	o•l/vv Œ }Æ ïìlñ h/w]vš•Œ }A	

MARKING

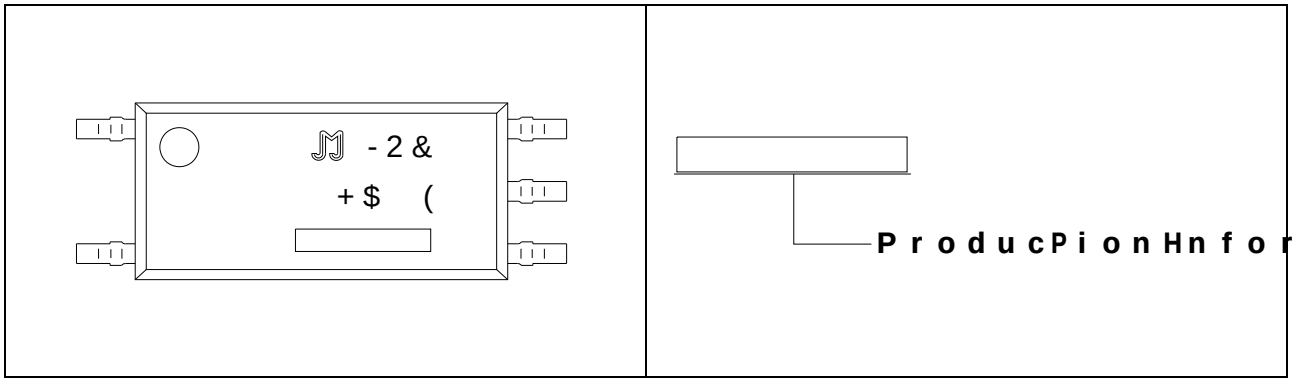

Characte[redacted] Curves

FIG.1: For[redacted]urrent vs. Forward Voltage

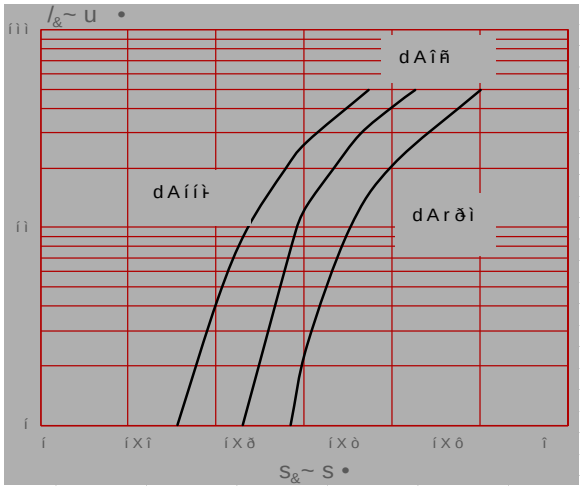

FIG.2: High Level Output Current vs. Ambient Temperature

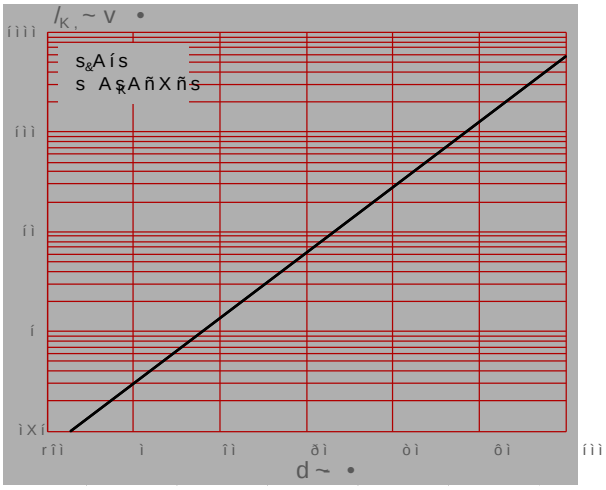

FIG.3: Output Current vs. Forward Current

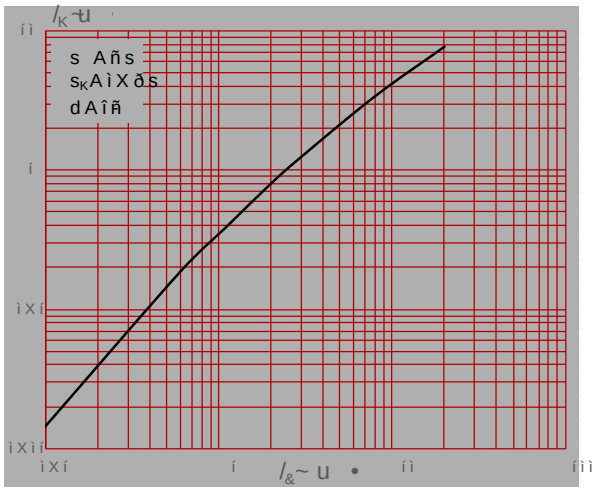

FIG.4: Normali z ed Current Transfer Ratio vs. Forward Current

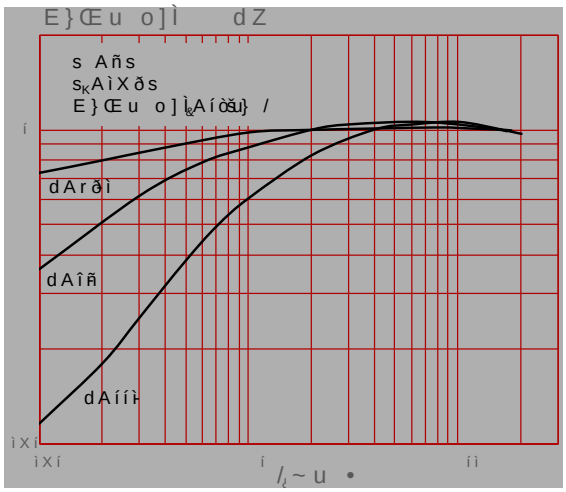

FIG.5: Normali z ed Current Transfer Ratio vs. Ambient Temperature

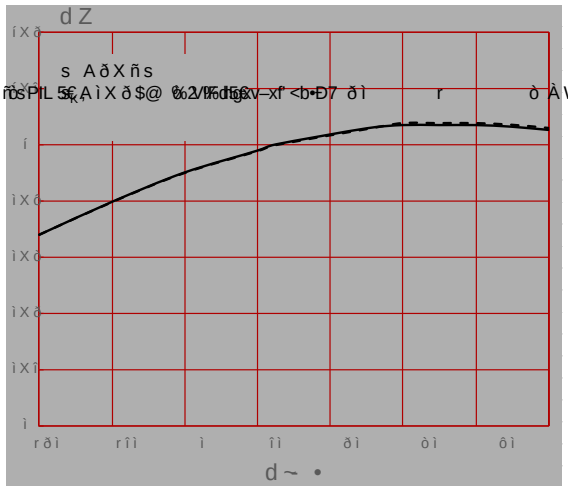

FIG.6: Output Current vs. Output Voltage

À Büb•Ð"À ñ›sPIL 5€ A ì X ð $@ %2/%dbgx v–xf' <b•Ð7 ðì r ò À Wƒ 2h 7x3 IfÌ S € r ðP

FIG.7: Low Level Output Voltage vs. Ambient Temperature

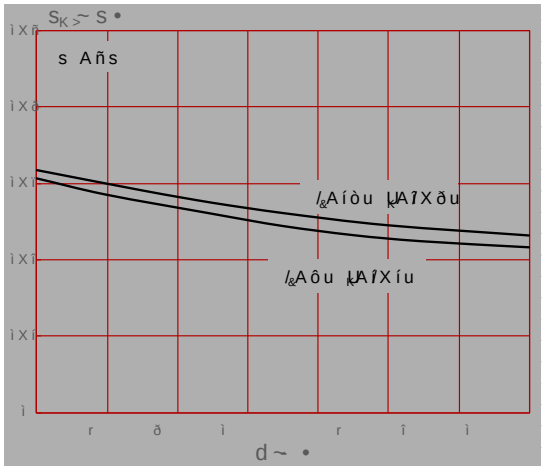

FIG.8: Propagation Delay vs. Load Resistance

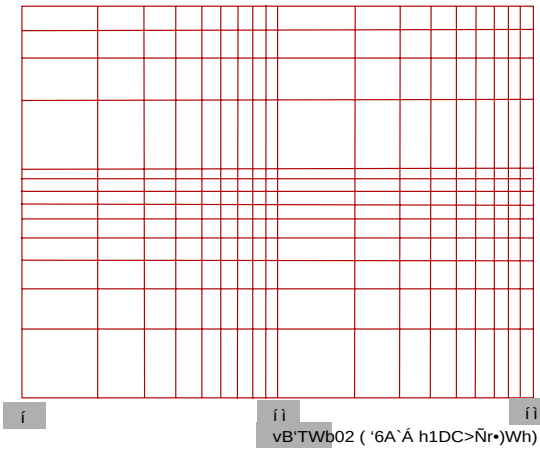

TEST CIRCUITS

Fig.10: Switching Time Test Circuit and Waveform

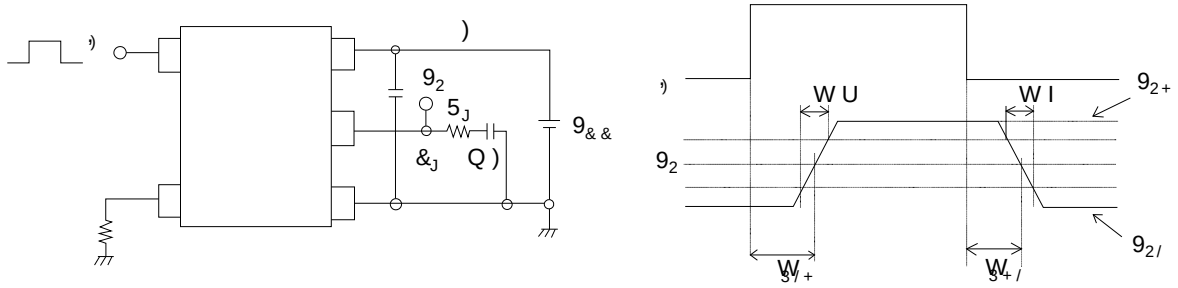

Fig.11: CMTI Test Circuit and Waveform

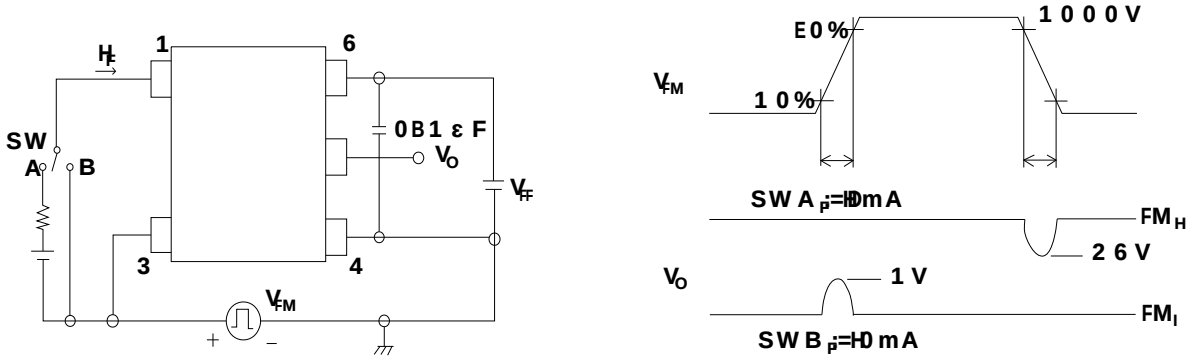

Package Dimension (Unit: mm)

LSOP5

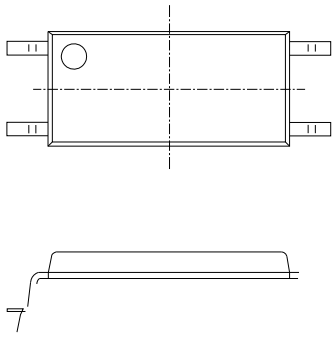

Ref	Gimensions					
	MillimePers			HncOes		
	Min	Typ	MMx	Min	Typ	MMx
A	7B40		7B80	0B2E1		0B307
B	3B40		3B80	0B134		0B1D0
F	0B00		0B20	0B000		0B008
G	1B80		2B20	0B071		0B087
E	8B10		8B70	0B31E		0B343
F	0B40		1B00	0B016		0B03E
G	EBE0		10BD	00B3E0		0B413
H	0B10		0B30	0B004		0B012
H	1B80		2B40	0B071		0B0E4
J	0B2D		0BDD	0B010		0B022
K						

RECOMMENDED SOLDER MASK (Dimensions in mm unless otherwise stated)

LSOP5

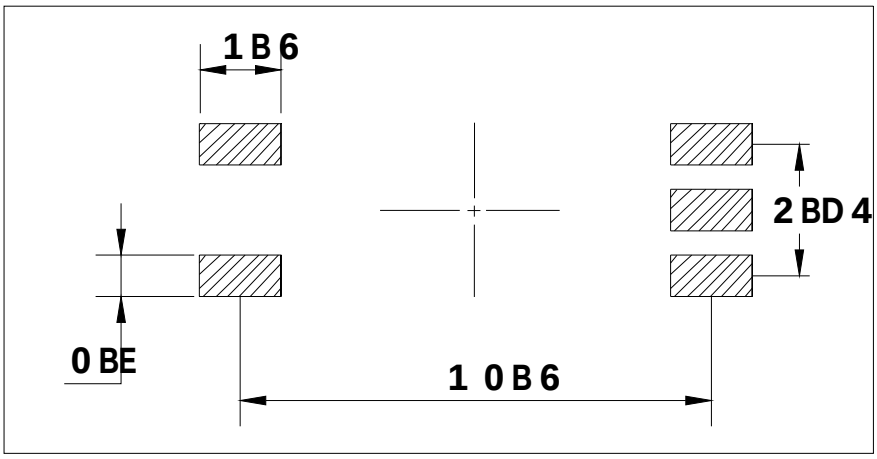

LSOP5W

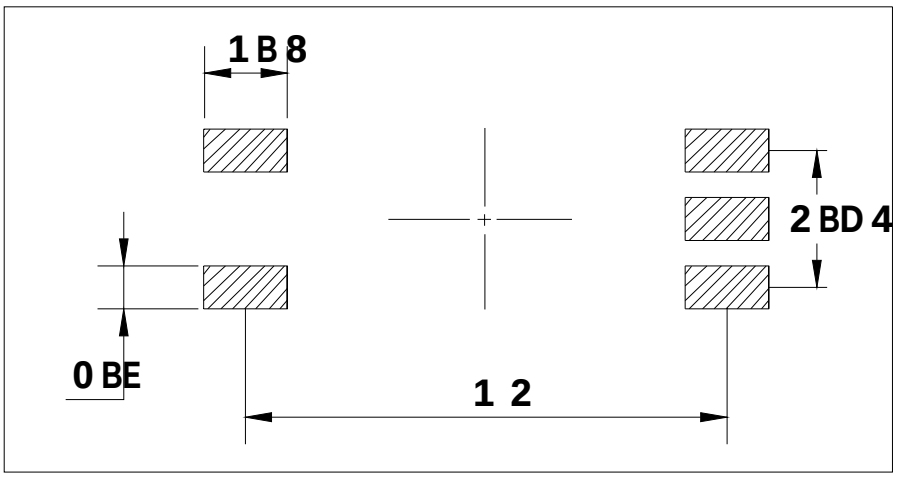

CARRIER TAPE SPECIFICATIONS (Dimensions in mm unless otherwise stated)

Option None

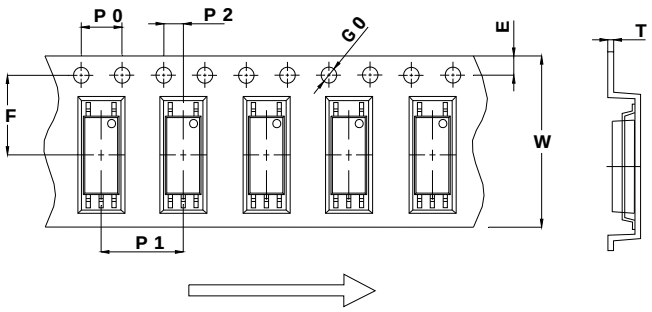

Ref	Gimensions					
	MillimePers			HncOes		
	Min	Typ	MMx	Min	Typ	MMx
G0	1.50	1.55	1.60	0.059	0.061	0.063
P0	3.95	4.00	4.10	0.155	0.157	0.161
P1	7.95	8.00	8.10	0.313	0.315	0.31E
P2	1.95	2.00	2.10	0.077	0.079	0.083
E	1.65	1.75	1.85	0.065	0.069	0.073
F	7.40	7.50	7.60	0.29E	0.295	0.29E
T	0.35	0.40	0.45	0.014	0.016	0.018
W	15.80	16.00	16.20	0.622	0.630	0.638

Option R

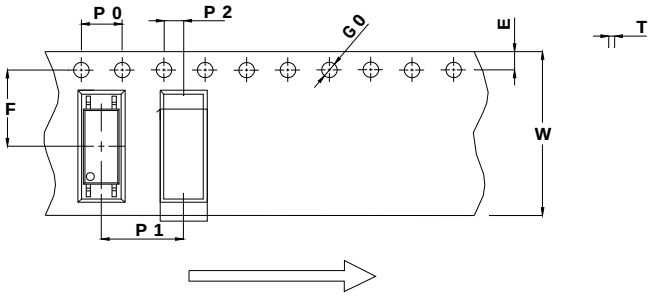

Ref	Gimensions					
	MillimePers			HncOes		
	Min	Typ	MMx	Min	Typ	MMx
G0	1.50	1.55	1.60	0.059	0.061	0.063
P0	3.95	4.00	4.10	0.155	0.157	0.161
P1	7.95	8.00	8.10	0.313	0.315	0.31E
P2	1.95	2.00	2.10	0.077	0.079	0.083
E	1.65	1.75	1.85	0.065	0.069	0.073
F	7.40	7.50	7.60	0.29E	0.295	0.29E
T	0.35	0.40	0.45	0.014	0.016	0.018
W	15.80	16.00	16.20	0.622	0.630	0.638

REFLOW INFORMATION

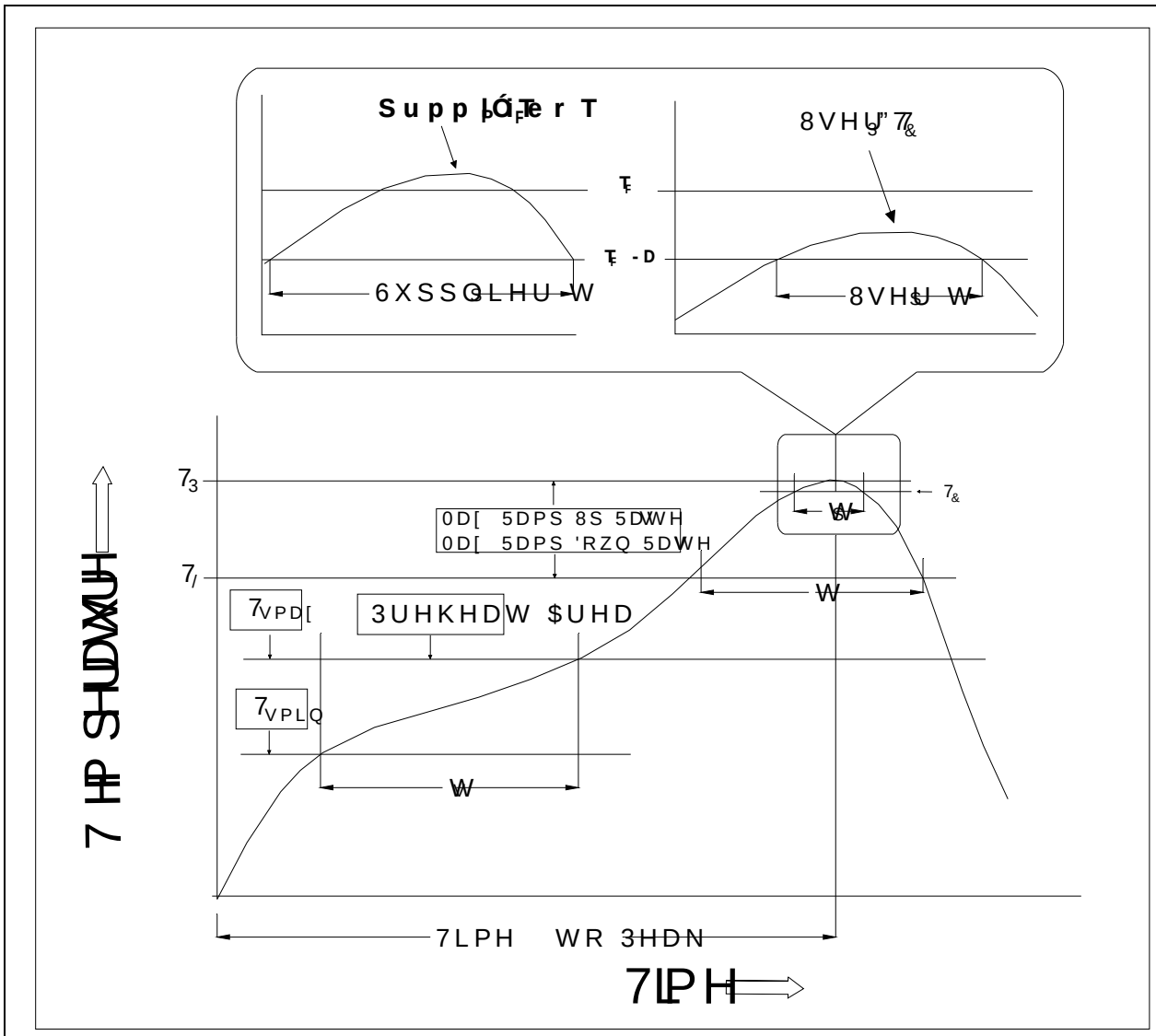

Profile Feature	Sn-Pb Assembly Profile	Pb-Free Assembly Profile
Temperature Min. (Tsmin)	**100**	
7HPSHUDWXUH 0D[	7VPD[	
7LPH WV IURP 7VPLQ WR 7VPD[	VHFRQGV	VHFRQGV
5DPS XS 5DWH W/ WR W3HDN	VHFRQG PD[	VHFRQG PD[
/LTXLGXV 7HPSHUDWXUH 7/		
7LPH W/ 0DLQWDLQHG $EROYH 7/	VHFRQGV	VHFRQGV
3HDN %RG\ 3DFNDJH	7HPSHUDWXUH	
7LPH W3 ZLWKLQ	VHFRQGV	VHFRQGV
5DPS GRZQ 5DWH	73 WR 7/ VHFRQG	VHFRQG
7LPH WR 3HDN 7HPSHUDWXUH	PLQXWHV PD[	PLQXWHV PD[

1RWH

5HIORZ VROGHULQJ LV UHFRPPHQGHG DVZKRZQ RQ WKH SRWHQWLDO WKDW WKH FRQ

$YRLG GLUHFW FRQWDFW RQ WKH SRWHQWLRPHWHU EXW GRZQ WR WKH FRUH H[FHHGLQJ LWV PD VWRUDJH WHPSHUDWXUH

$SSOLFDWLRQ RKHSUHSRY\XEURGRKQLEWLSOHG DDWWHG WHPSHUDWXUHV ,Q V VFHQDULRV DQ'HDPSXSVOWLHQGR WRH[FHHG 1

(QVXUH WKH FRPSRQHQW KDV FRROHG VXURDFHEWKQDWZLXSVHUDXHQ PDQXIDFWXULQJ VWHSV

7KH FRPSRQHQW HKDRV EQVHKHOD UOZKHQVWDRQGHGGXQHGLWLRQV

5HFRPPHQG VWRUDJH 7HPS a ƒ&

5HFRPPHQG VWRUDJH KXPLGLW\

06/ OHYHO 06/

,QIRUPDWLRQ IXUQLVKHG LQ WKLV GRFXPHQW LV EHOLHYHG WR EH DFFXUDWH D -LDQJVX -LH-LH 0LFURURH&RRH&WHG &RQQHFWDUVRQLFHV &RQVXOWLQJ &RUSRUDWLRQ &RQ RI XVH ZLWKRXW FRQVLGHUDWLRQ IRG &RWFKQLURUPDWLRQ &RQ LQ WKLV GRFXPHQWKDLQJ &XZLWKHFRX &RQ &RQRWLFH DSDUW IURP V VLJQHG -LDQJVX &O-LHH &LZHLFRKPWKH DJUHHPHQW

3URGXFWV DQG LQIRUPDWLRQ SURYLGHGQ LQQHQPHWQWVRG &RSFDXWH -LDQJVX -LH-LH DVVXPHVOLQR &UURRVSRQ&VLQIULQJHPHQW RI RW ZKLFK PD&\ UHVXOW IURP WKH XVH RI V7XKHK &URFXPHQW DQG &RS DQG UHSODFHV DOO LQIRUPDWLRQ SUHYLRXVO&\ VXSSOLHG